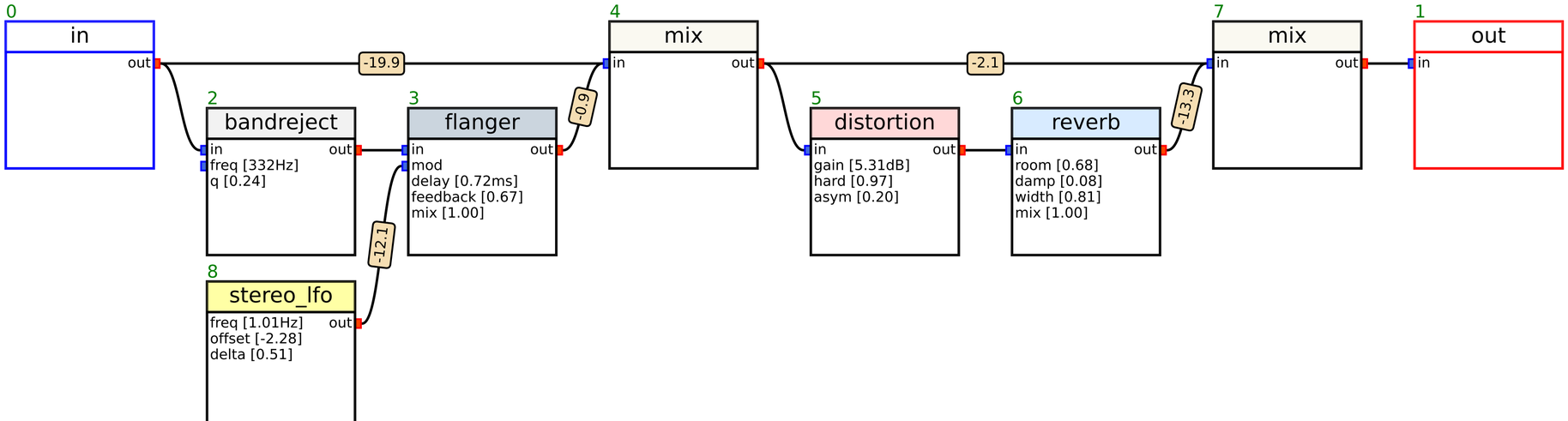
0
in
out
-19.9
2
bandreject
in
out
freq [332Hz]
q [0.24]
3
flanger
in
out
mod
delay [0.72ms]
feedback [0.67]
mix [1.00]
-0.9
-12.1
8
stereo_lfo
freq [1.01Hz]
offset [-2.28]
delta [0.51]
out
4
mix
in
out
-2.1
5
distortion
in
out
gain [5.31dB]
hard [0.97]
asym [0.20]
6
reverb
in
out
room [0.68]
damp [0.08]
width [0.81]
mix [1.00]
-13.3
7
mix
in
out
1
out
in