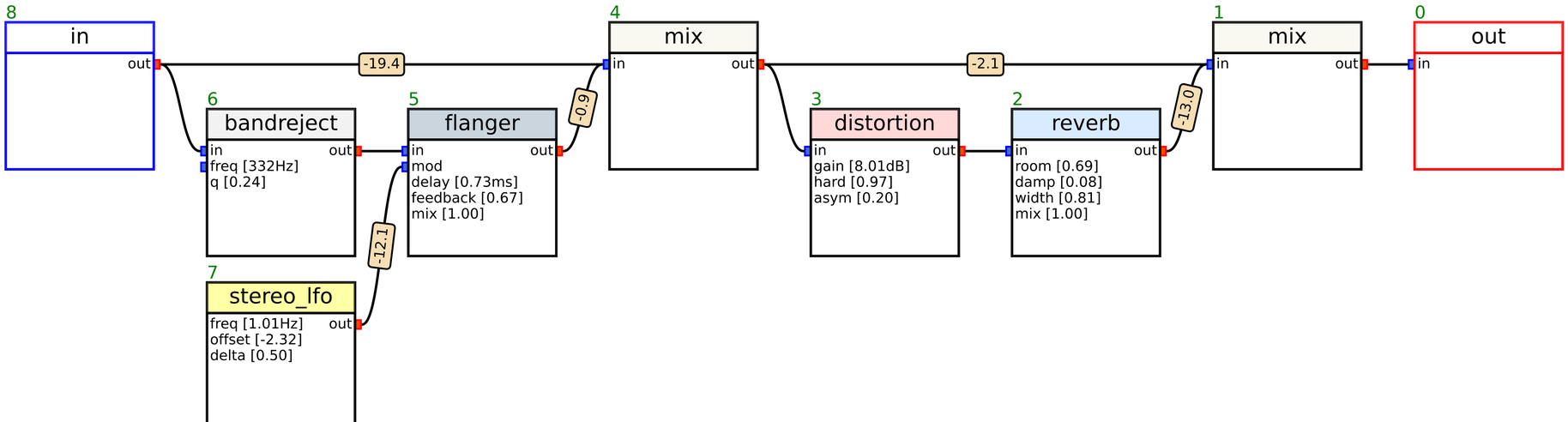
8
in
out
-19.4
6
bandreject
in
out
freq [332Hz]
q [0.24]
5
flanger
in
out
mod
delay [0.73ms]
feedback [0.67]
mix [1.00]
-0.9
-12.1
7
stereo_lfo
freq [1.01Hz]
out
offset [-2.32]
delta [0.50]
4
mix
in
out
-2.1
3
distortion
in
out
gain [8.01dB]
hard [0.97]
asym [0.20]
2
reverb
in
out
room [0.69]
damp [0.08]
width [0.81]
mix [1.00]
-13.0
1
mix
in
out
0
out
in