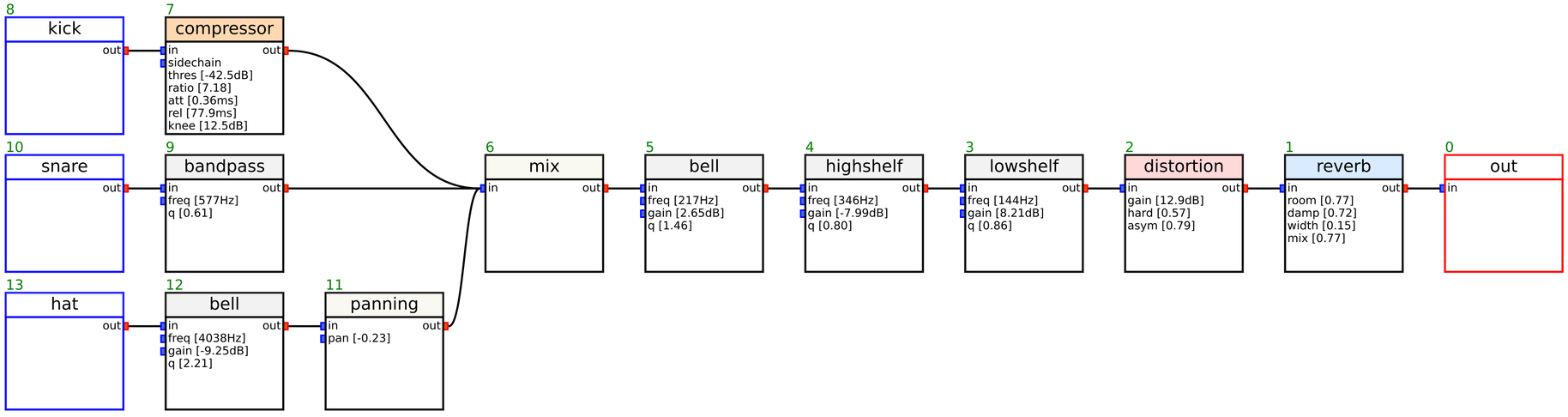
8
kick
out
7
compressor
in
out
sidechain
thres [-42.5dB]
ratio [7.18]
att [0.36ms]
rel [77.9ms]
knee [12.5dB]
10
snare
out
9
bandpass
in
out
freq [577Hz]
q [0.61]
13
hat
out
12
bell
in
out
freq [4038Hz]
gain [-9.25dB]
q [2.21]
11
panning
in
out
pan [-0.23]
6
mix
in
out
5
bell
in
out
freq [217Hz]
gain [2.65dB]
q [1.46]
4
highshelf
in
out
freq [346Hz]
gain [-7.99dB]
q [0.80]
3
lowshelf
in
out
freq [144Hz]
gain [8.21dB]
q [0.86]
2
distortion
in
out
gain [12.9dB]
hard [0.57]
asym [0.79]
1
reverb
in
out
room [0.77]
damp [0.72]
width [0.15]
mix [0.77]
0
out
in