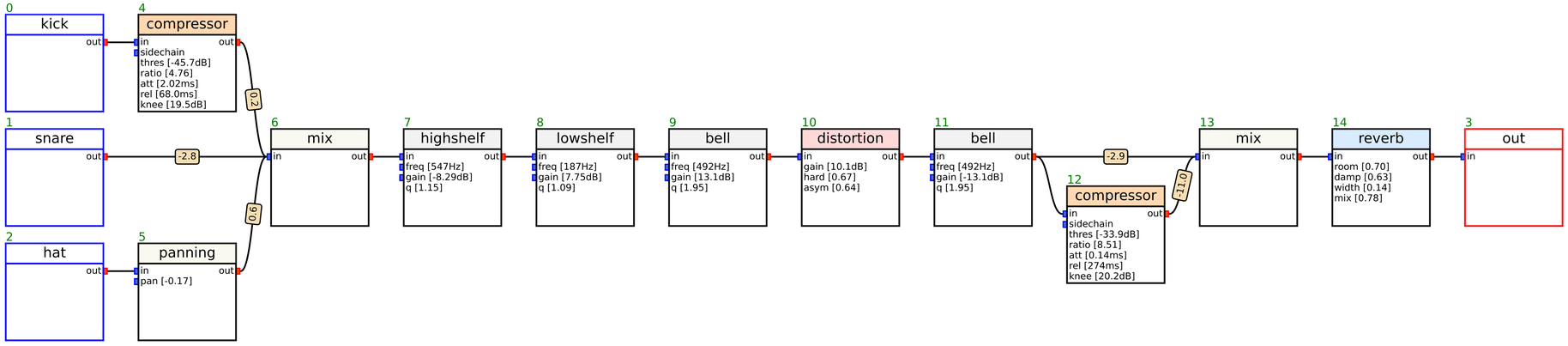
0
kick
out
1
snare
out
2
hat
out
4
compressor
in
out
sidechain
thres [-45.7dB]
ratio [4.76]
att [2.02ms]
rel [68.0ms]
knee [19.5dB]
5
panning
in
out
pan [-0.17]
-2.8
-0.2
-0.6
6
mix
in
out
7
highshelf
in
out
freq [547Hz]
gain [-8.29dB]
q [1.15]
8
lowshelf
in
out
freq [187Hz]
gain [7.75dB]
q [1.09]
9
bell
in
out
freq [492Hz]
gain [13.1dB]
q [1.95]
10
distortion
in
out
gain [10.1dB]
hard [0.67]
asym [0.64]
11
bell
in
out
freq [492Hz]
gain [-13.1dB]
q [1.95]
-2.9
12
compressor
in
out
sidechain
thres [-33.9dB]
ratio [8.51]
att [0.14ms]
rel [274ms]
knee [20.2dB]
-11.0
13
mix
in
out
14
reverb
in
out
room [0.70]
damp [0.63]
width [0.14]
mix [0.78]
3
out
in