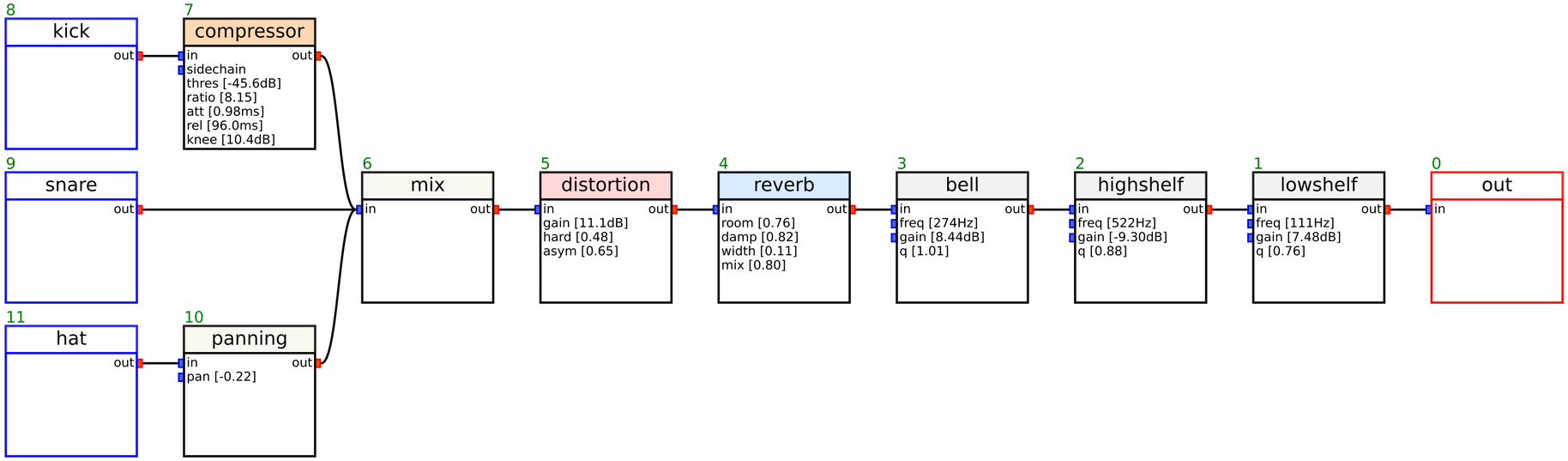
8
kick
out
7
compressor
in
out
sidechain
thres [-45.6dB]
ratio [8.15]
att [0.98ms]
rel [96.0ms]
knee [10.4dB]
9
snare
out
11
hat
out
10
panning
in
out
pan [-0.22]
6
mix
in
out
5
distortion
in
out
gain [11.1dB]
hard [0.48]
asym [0.65]
4
reverb
in
out
room [0.76]
damp [0.82]
width [0.11]
mix [0.80]
3
bell
in
out
freq [274Hz]
gain [8.44dB]
q [1.01]
2
highshelf
in
out
freq [522Hz]
gain [-9.30dB]
q [0.88]
1
lowshelf
in
out
freq [111Hz]
gain [7.48dB]
q [0.76]
0
out
in