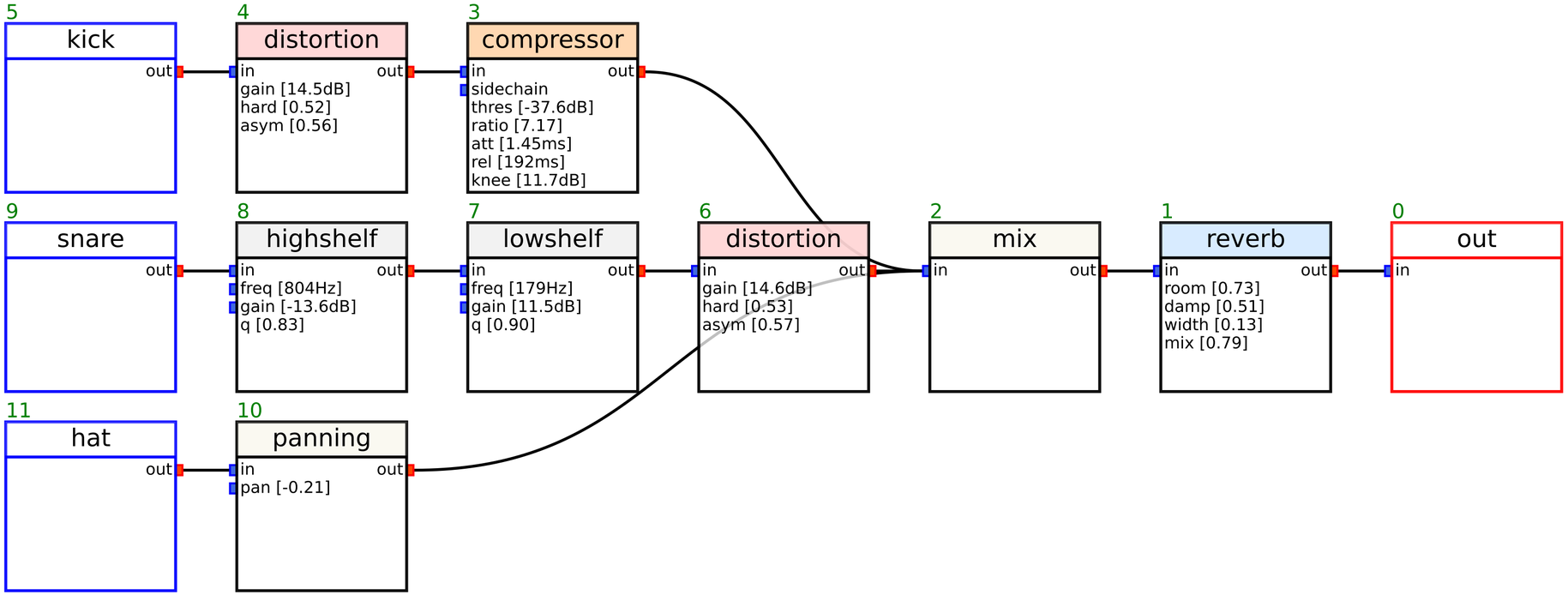
5
kick
out
4
distortion
in
out
gain [14.5dB]
hard [0.52]
asym [0.56]
3
compressor
in
out
sidechain
thres [-37.6dB]
ratio [7.17]
att [1.45ms]
rel [192ms]
knee [11.7dB]
9
snare
out
8
highshelf
in
out
freq [804Hz]
gain [-13.6dB]
q [0.83]
7
lowshelf
in
out
freq [179Hz]
gain [11.5dB]
q [0.90]
6
distortion
in
out
gain [14.6dB]
hard [0.53]
asym [0.57]
2
mix
in
out
1
reverb
in
out
room [0.73]
damp [0.51]
width [0.13]
mix [0.79]
0
out
in
11
hat
out
10
panning
in
out
pan [-0.21]