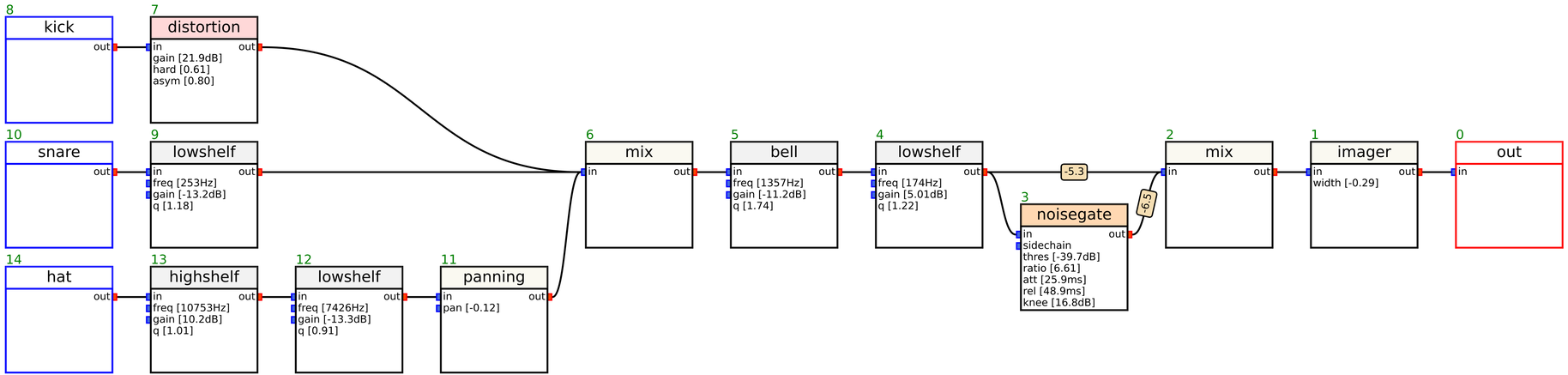
8
kick
out
7
distortion
in
out
gain [21.9dB]
hard [0.61]
asym [0.80]
10
snare
out
9
lowshelf
in
out
freq [253Hz]
gain [-13.2dB]
q [1.18]
14
hat
out
13
highshelf
in
out
freq [10753Hz]
gain [10.2dB]
q [1.01]
12
lowshelf
in
out
freq [7426Hz]
gain [-13.3dB]
q [0.91]
11
panning
in
out
pan [-0.12]
6
mix
in
out
5
bell
in
out
freq [1357Hz]
gain [-11.2dB]
q [1.74]
4
lowshelf
in
out
freq [174Hz]
gain [5.01dB]
q [1.22]
-5.3
-6.5
3
noisegate
in
out
sidechain
thres [-39.7dB]
ratio [6.61]
att [25.9ms]
rel [48.9ms]
knee [16.8dB]
2
mix
in
out
1
imager
in
out
width [-0.29]
0
out
in