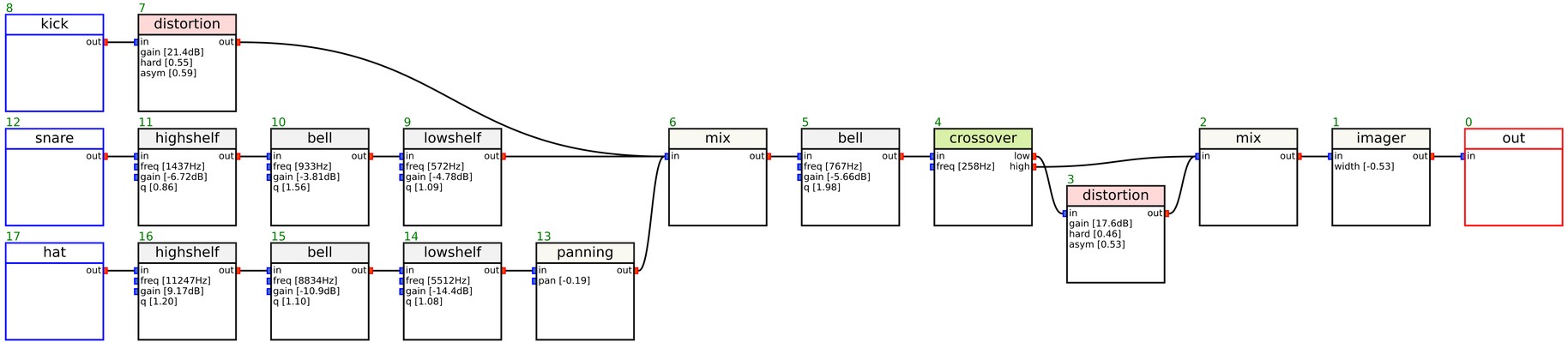
8
kick
out
7
distortion
in
out
gain [21.4dB]
hard [0.55]
asym [0.59]
12
snare
out
11
highshelf
in
out
freq [1437Hz]
gain [-6.72dB]
q [0.86]
10
bell
in
out
freq [933Hz]
gain [-3.81dB]
q [1.56]
9
lowshelf
in
out
freq [572Hz]
gain [-4.78dB]
q [1.09]
6
mix
in
out
5
bell
in
out
freq [767Hz]
gain [-5.66dB]
q [1.98]
4
crossover
in
low
freq [258Hz]
high
3
distortion
in
out
gain [17.6dB]
hard [0.46]
asym [0.53]
2
mix
in
out
1
imager
in
out
width [-0.53]
0
out
in
17
hat
out
16
highshelf
in
out
freq [11247Hz]
gain [9.17dB]
q [1.20]
15
bell
in
out
freq [8834Hz]
gain [-10.9dB]
q [1.10]
14
lowshelf
in
out
freq [5512Hz]
gain [-14.4dB]
q [1.08]
13
panning
in
out
pan [-0.19]