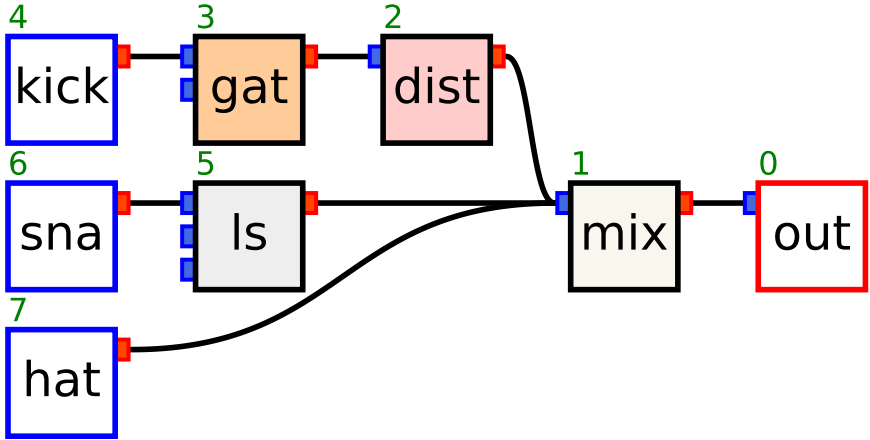
4
kick
3
gat
2
dist
6
sna
5
ls
1
mix
0
out
7
hat