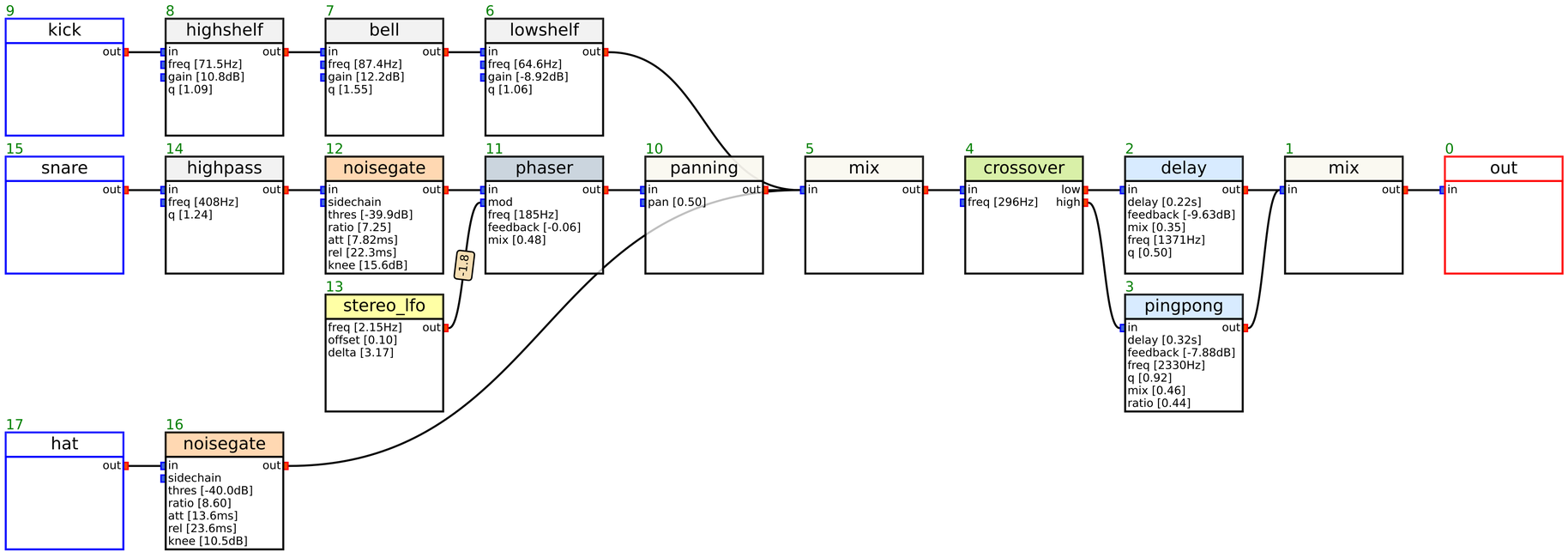
9
kick
out
8
highshelf
in
out
freq [71.5Hz]
gain [10.8dB]
q [1.09]
7
bell
in
out
freq [87.4Hz]
gain [12.2dB]
q [1.55]
6
lowshelf
in
out
freq [64.6Hz]
gain [-8.92dB]
q [1.06]
15
snare
out
14
highpass
in
out
freq [408Hz]
q [1.24]
12
noisegate
in
out
sidechain
thres [-39.9dB]
ratio [7.25]
att [7.82ms]
rel [22.3ms]
knee [15.6dB]
11
phaser
in
out
mod
freq [185Hz]
feedback [-0.06]
mix [0.48]
-1.8
13
stereo_lfo
freq [2.15Hz]
out
offset [0.10]
delta [3.17]
10
panning
in
out
pan [0.50]
5
mix
in
out
4
crossover
in
low
freq [296Hz]
high
2
delay
in
out
delay [0.22s]
feedback [-9.63dB]
mix [0.35]
freq [1371Hz]
q [0.50]
3
pingpong
in
out
delay [0.32s]
feedback [-7.88dB]
freq [2330Hz]
q [0.92]
mix [0.46]
ratio [0.44]
1
mix
in
out
0
out
in
17
hat
out
16
noisegate
in
out
sidechain
thres [-40.0dB]
ratio [8.60]
att [13.6ms]
rel [23.6ms]
knee [10.5dB]