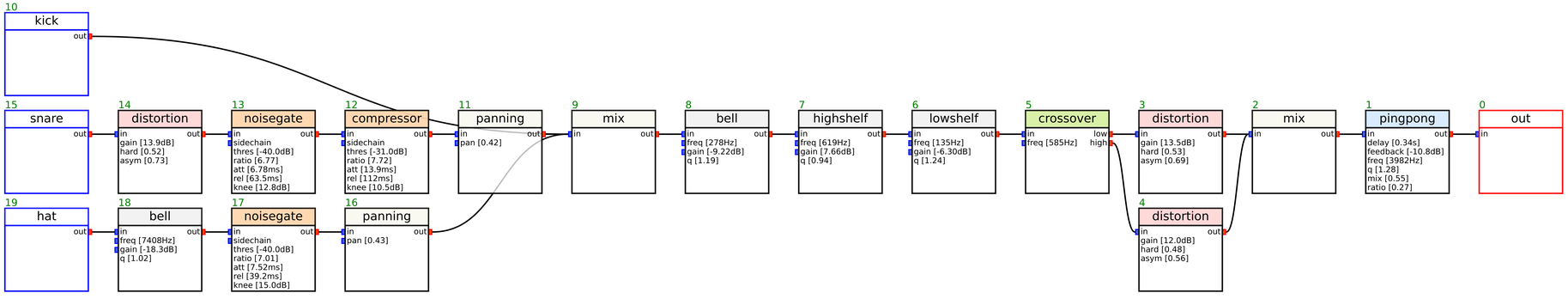
10
kick
out
15
snare
out
19
hat
out
14
distortion
in
out
gain [13.9dB]
hard [0.52]
asym [0.73]
18
bell
in
out
freq [7408Hz]
gain [-18.3dB]
q [1.02]
13
noisegate
in
out
sidechain
thres [-40.0dB]
ratio [6.77]
att [6.78ms]
rel [63.5ms]
knee [12.8dB]
17
noisegate
in
out
sidechain
thres [-40.0dB]
ratio [7.01]
att [7.52ms]
rel [39.2ms]
knee [15.0dB]
12
compressor
in
out
sidechain
thres [-31.0dB]
ratio [7.72]
att [13.9ms]
rel [112ms]
knee [10.5dB]
16
panning
in
out
pan [0.43]
11
panning
in
out
pan [0.42]
9
mix
in
out
8
bell
in
out
freq [278Hz]
gain [-9.22dB]
q [1.19]
7
highshelf
in
out
freq [619Hz]
gain [7.66dB]
q [0.94]
6
lowshelf
in
out
freq [135Hz]
gain [-6.30dB]
q [1.24]
5
crossover
in
low
high
freq [585Hz]
3
distortion
in
out
gain [13.5dB]
gard [0.53]
asym [0.69]
4
distortion
in
out
gain [12.0dB]
hard [0.48]
asym [0.56]
2
mix
in
out
1
pingpong
in
out
delay [0.34s]
feedback [-10.8dB]
freq [3982Hz]
q [1.28]
mix [0.55]
ratio [0.27]
0
out
in