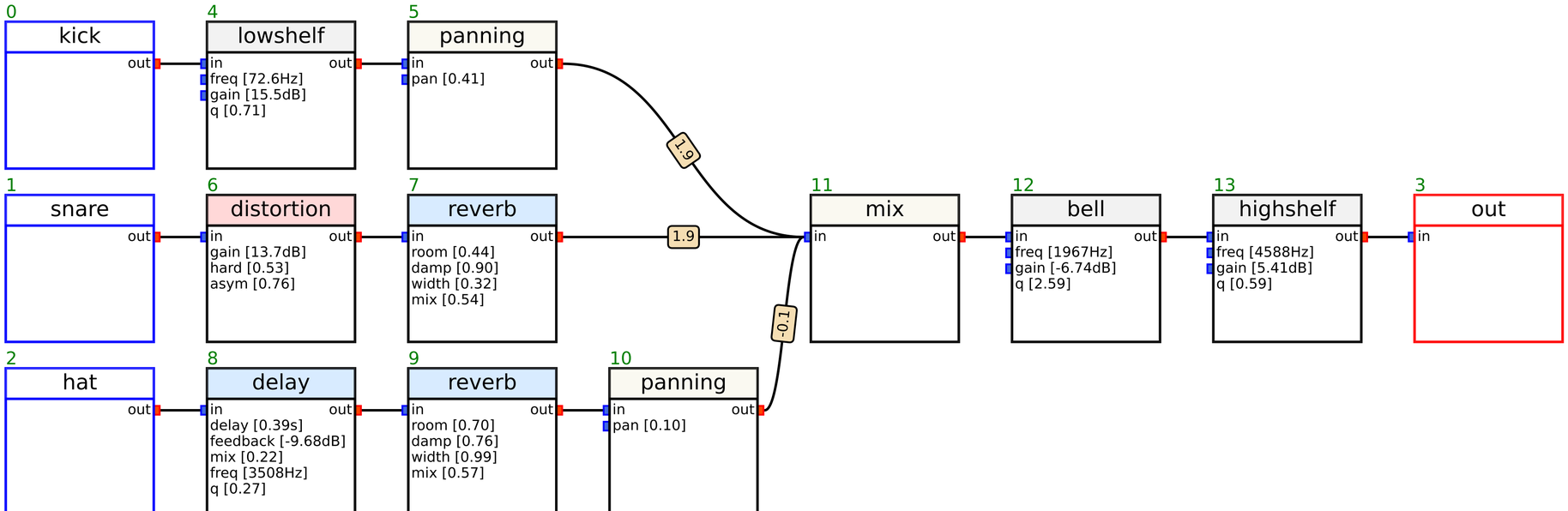
0
kick
out
4
lowshelf
in
out
freq [72.6Hz]
gain [15.5dB]
q [0.71]
5
panning
in
out
pan [0.41]
1.9
1
snare
out
6
distortion
in
out
gain [13.7dB]
hard [0.53]
asym [0.76]
7
reverb
in
out
room [0.44]
damp [0.90]
width [0.32]
mix [0.54]
1.9
11
mix
in
out
12
bell
in
out
freq [1967Hz]
gain [-6.74dB]
q [2.59]
13
highshelf
in
out
freq [4588Hz]
gain [5.41dB]
q [0.59]
3
out
in
-0.1
2
hat
out
8
delay
in
out
delay [0.39s]
feedback [-9.68dB]
mix [0.22]
freq [3508Hz]
q [0.27]
9
reverb
in
out
room [0.70]
damp [0.76]
width [0.99]
mix [0.57]
10
panning
in
out
pan [0.10]