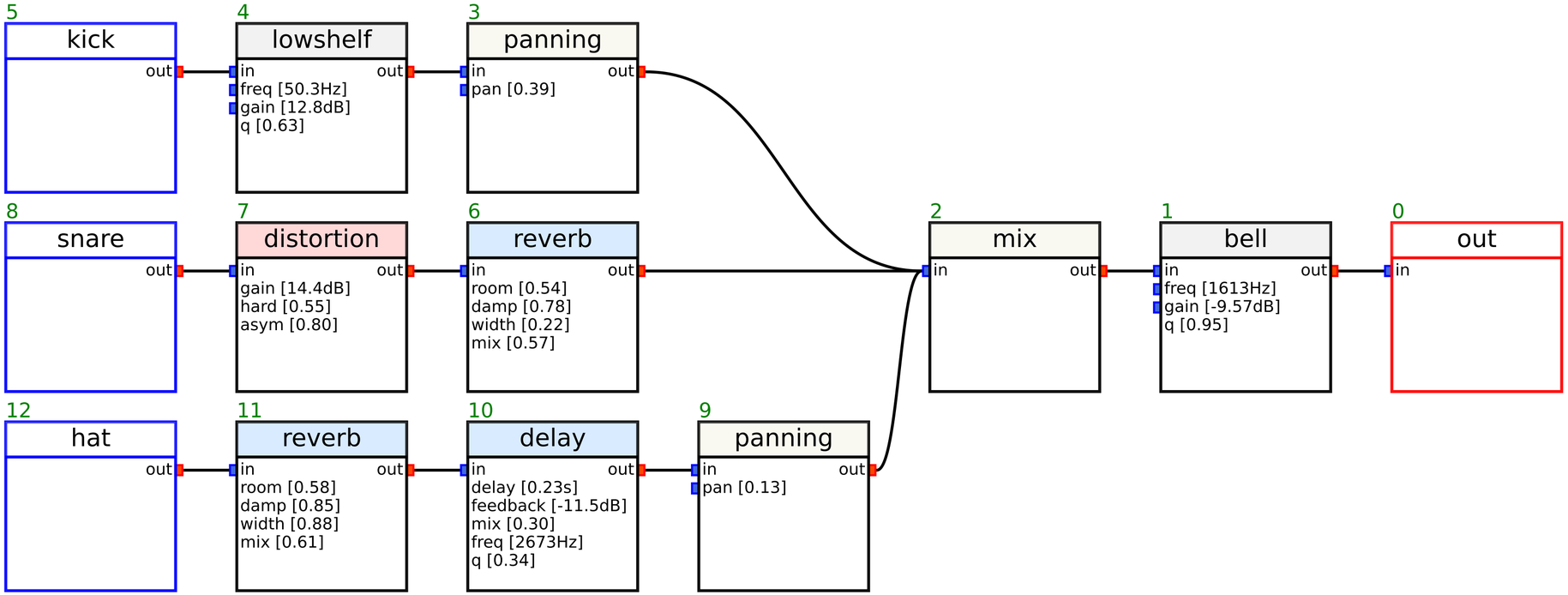
5
kick
out
4
lowshelf
in
out
freq [50.3Hz]
gain [12.8dB]
q [0.63]
3
panning
in
out
pan [0.39]
8
snare
out
7
distortion
in
out
gain [14.4dB]
hard [0.55]
asym [0.80]
6
reverb
in
out
room [0.54]
damp [0.78]
width [0.22]
mix [0.57]
2
mix
in
out
1
bell
in
out
freq [1613Hz]
gain [-9.57dB]
q [0.95]
0
out
in
12
hat
out
11
reverb
in
out
room [0.58]
damp [0.85]
width [0.88]
mix [0.61]
10
delay
in
out
delay [0.23s]
feedback [-11.5dB]
mix [0.30]
freq [2673Hz]
q [0.34]
9
panning
in
out
pan [0.13]