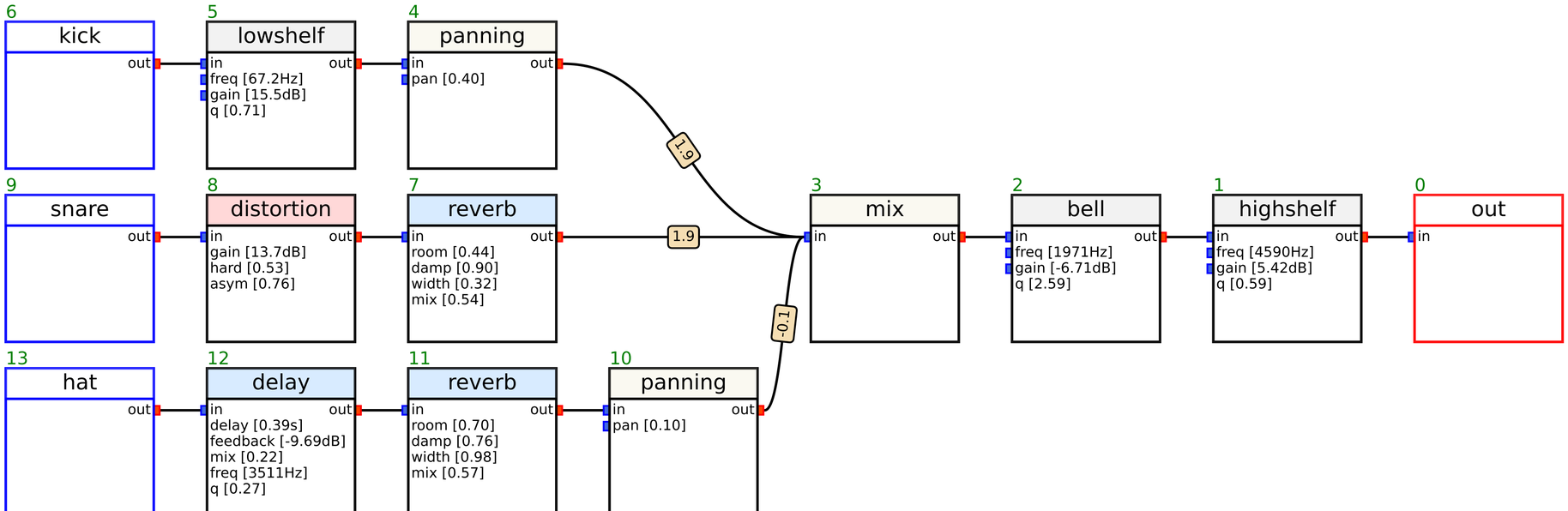
6
kick
out
5
lowshelf
in
out
freq [67.2Hz]
gain [15.5dB]
q [0.71]
4
panning
in
out
pan [0.40]
1.9
9
snare
out
8
distortion
in
out
gain [13.7dB]
hard [0.53]
asym [0.76]
7
reverb
in
out
room [0.44]
damp [0.90]
width [0.32]
mix [0.54]
1.9
3
mix
in
out
2
bell
in
out
freq [1971Hz]
gain [-6.71dB]
q [2.59]
1
highshelf
in
out
freq [4590Hz]
gain [5.42dB]
q [0.59]
0
out
in
-0.1
13
hat
out
12
delay
in
out
delay [0.39s]
feedback [-9.69dB]
mix [0.22]
freq [3511Hz]
q [0.27]
11
reverb
in
out
room [0.70]
damp [0.76]
width [0.98]
mix [0.57]
10
panning
in
out
pan [0.10]