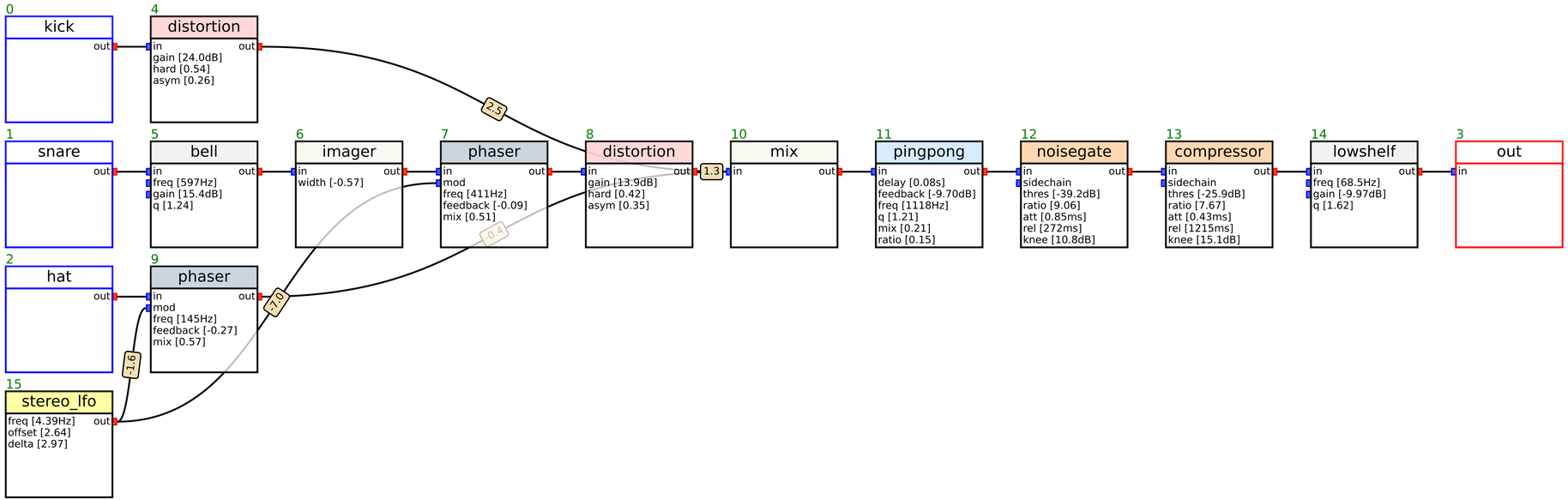
0
kick
out
4
distortion
in
out
gain [24.0dB]
hard [0.54]
asym [0.26]
1
snare
out
5
bell
in
out
freq [597Hz]
gain [15.4dB]
q [1.24]
6
imager
in
out
width [-0.57]
7
phaser
in
out
mod
freq [411Hz]
feedback [-0.09]
mix [0.51]
8
distortion
in
out
gain [13.9dB]
hard [0.42]
asym [0.35]
10
mix
in
out
11
pingpong
in
out
delay [0.08s]
feedback [-9.70dB]
freq [1118Hz]
q [1.21]
mix [0.21]
ratio [0.15]
12
noisegate
in
out
sidechain
thres [-39.2dB]
ratio [9.06]
att [0.85ms]
rel [272ms]
knee [10.8dB]
13
compressor
in
out
sidechain
thres [-25.9dB]
ratio [7.67]
att [0.43ms]
rel [1215ms]
knee [15.1dB]
14
lowshelf
in
out
freq [68.5Hz]
gain [-9.97dB]
q [1.62]
3
out
in
2
hat
out
9
phaser
in
out
mod
freq [145Hz]
feedback [-0.27]
mix [0.57]
15
stereo_lfo
out
freq [4.39Hz]
offset [2.64]
delta [2.97]
2.5
1.3
-0.4
-7.0
-1.6