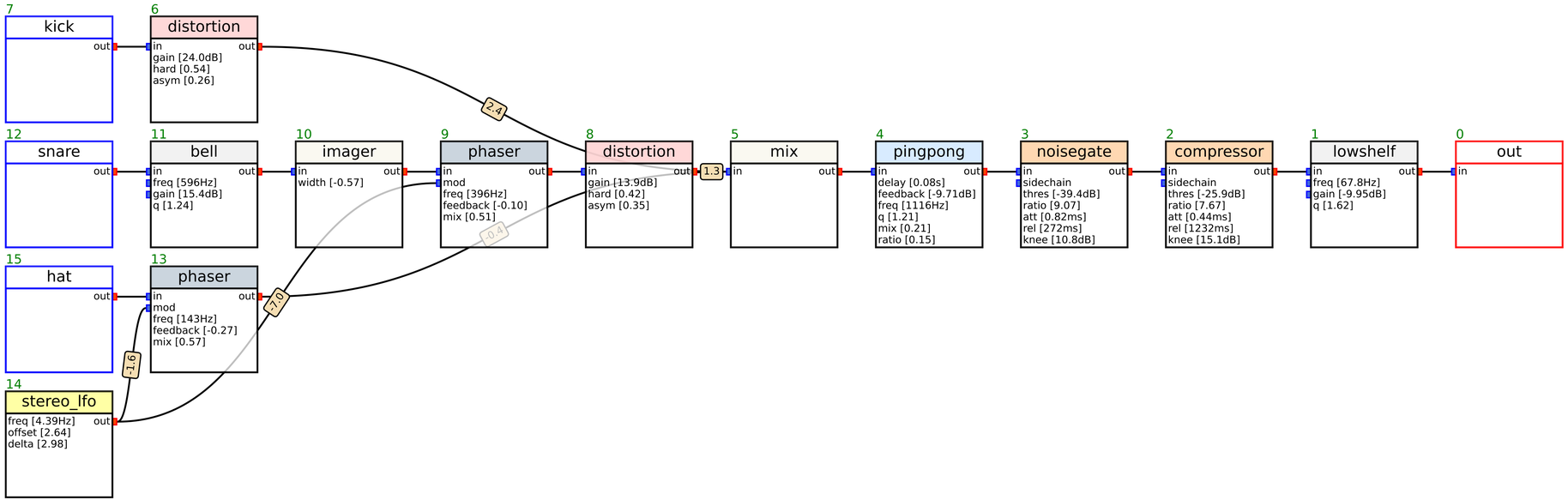
7
kick
out
6
distortion
in
out
gain [24.0dB]
hard [0.54]
asym [0.26]
2.4
12
snare
out
11
bell
in
out
freq [596Hz]
gain [15.4dB]
q [1.24]
10
imager
in
out
width [-0.57]
9
phaser
in
out
mod
freq [396Hz]
feedback [-0.10]
mix [0.51]
-0.4
8
distortion
in
out
gain [13.9dB]
hard [0.42]
asym [0.35]
1.3
5
mix
in
out
4
pingpong
in
out
delay [0.08s]
feedback [-9.71dB]
freq [1116Hz]
q [1.21]
mix [0.21]
ratio [0.15]
3
noisegate
in
out
sidechain
thres [-39.4dB]
ratio [9.07]
att [0.82ms]
rel [272ms]
knee [10.8dB]
2
compressor
in
out
sidechain
thres [-25.9dB]
ratio [7.67]
att [0.44ms]
rel [1232ms]
knee [15.1dB]
1
lowshelf
in
out
freq [67.8Hz]
gain [-9.95dB]
q [1.62]
0
out
in
15
hat
out
13
phaser
in
out
mod
freq [143Hz]
feedback [-0.27]
mix [0.57]
-7.0
-1.6
14
stereo_lfo
out
freq [4.39Hz]
offset [2.64]
delta [2.98]