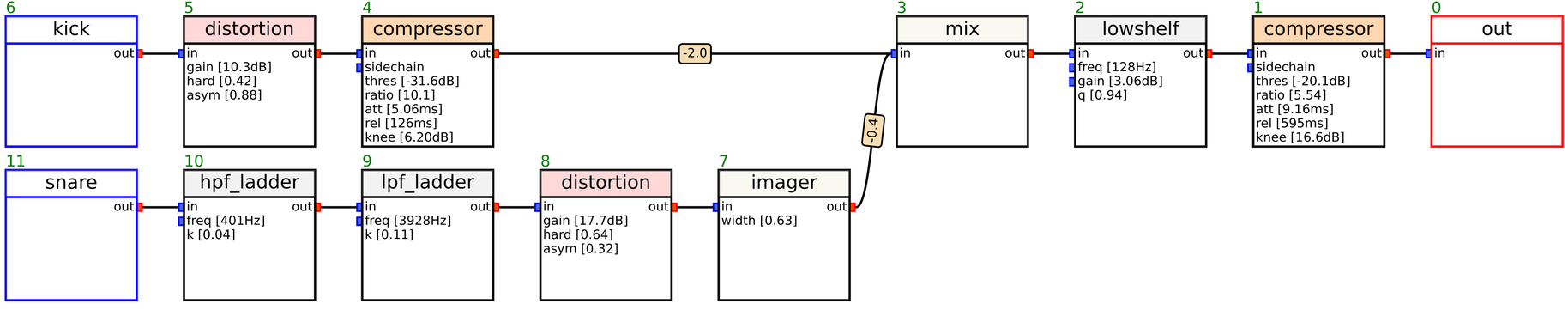
6
kick
out
5
distortion
in
out
gain [10.3dB]
hard [0.42]
asym [0.88]
4
compressor
in
out
sidechain
thres [-31.6dB]
ratio [10.1]
att [5.06ms]
rel [126ms]
knee [6.20dB]
-2.0
3
mix
in
out
2
lowshelf
in
out
freq [128Hz]
gain [3.06dB]
q [0.94]
1
compressor
in
out
sidechain
thres [-20.1dB]
ratio [5.54]
att [9.16ms]
rel [595ms]
knee [16.6dB]
0
out
in
11
snare
out
10
hpf_ladder
in
out
freq [401Hz]
k [0.04]
9
lpf_ladder
in
out
freq [3928Hz]
k [0.11]
8
distortion
in
out
gain [17.7dB]
hard [0.64]
asym [0.32]
7
imager
in
out
width [0.63]
-0.4