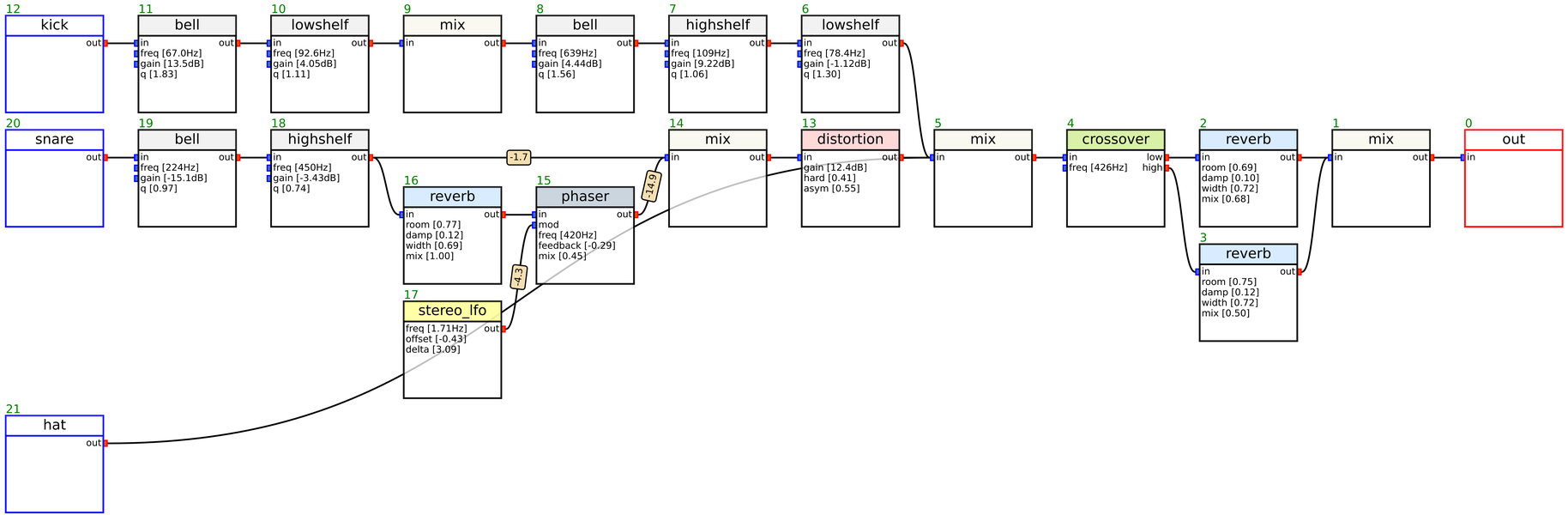
12
kick
out
11
bell
in
out
freq [67.0Hz]
gain [13.5dB]
q [1.83]
10
lowshelf
in
out
freq [92.6Hz]
gain [4.05dB]
q [1.11]
9
mix
in
out
8
bell
in
out
freq [639Hz]
gain [4.44dB]
q [1.56]
7
highshelf
in
out
freq [109Hz]
gain [9.22dB]
q [1.06]
6
lowshelf
in
out
freq [78.4Hz]
gain [-1.12dB]
q [1.30]
20
snare
out
19
bell
in
out
freq [224Hz]
gain [-15.1dB]
q [0.97]
18
highshelf
in
out
freq [450Hz]
gain [-3.43dB]
q [0.74]
-1.7
16
reverb
in
out
room [0.77]
damp [0.12]
width [0.69]
mix [1.00]
15
phaser
in
out
mod
freq [420Hz]
feedback [-0.29]
mix [0.45]
14.9
4.3
17
stereo_lfo
freq [1.71Hz]
offset [-0.43]
delta [3.09]
out
14
mix
in
out
13
distortion
in
out
gain [12.4dB]
hard [0.41]
asym [0.55]
5
mix
in
out
4
crossover
in
low
freq [426Hz]
high
2
reverb
in
out
room [0.69]
damp [0.10]
width [0.72]
mix [0.68]
3
reverb
in
out
room [0.75]
damp [0.12]
width [0.72]
mix [0.50]
1
mix
in
out
0
out
in
21
hat
out