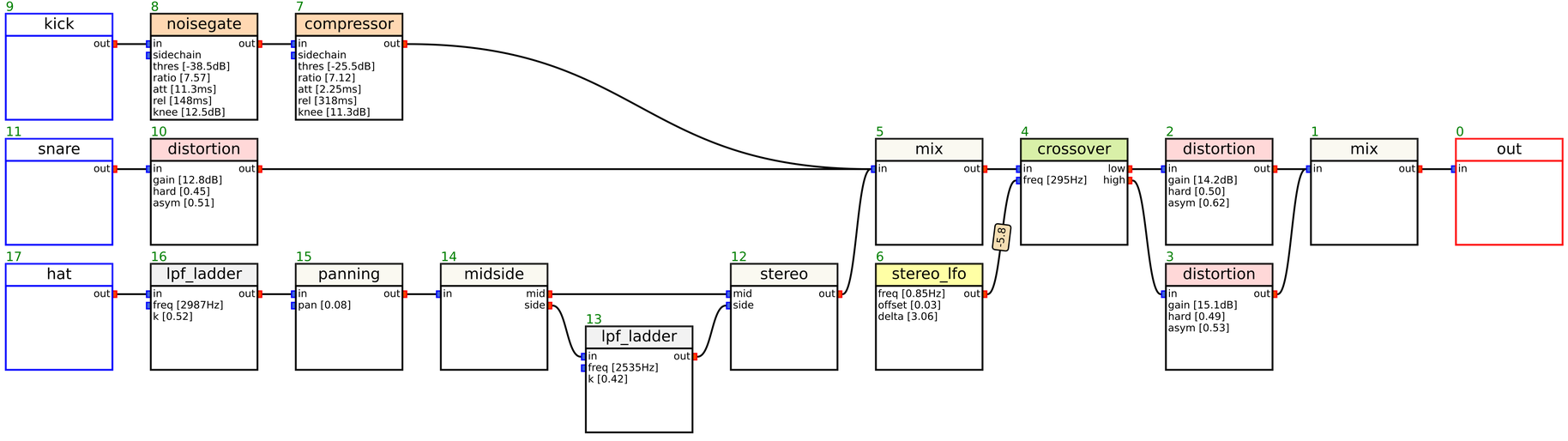
9
kick
out
8
noisegate
in
out
sidechain
thres [-38.5dB]
ratio [7.57]
att [11.3ms]
rel [148ms]
knee [12.5dB]
7
compressor
in
out
sidechain
thres [-25.5dB]
ratio [7.12]
att [2.25ms]
rel [318ms]
knee [11.3dB]
11
snare
out
10
distortion
in
out
gain [12.8dB]
hard [0.45]
asym [0.51]
17
hat
out
16
lpf_ladder
in
out
freq [2987Hz]
k [0.52]
15
panning
in
out
pan [0.08]
14
midside
in
mid
side
13
lpf_ladder
in
out
freq [2535Hz]
k [0.42]
12
stereo
mid
side
out
5
mix
in
out
6
stereo_lfo
freq [0.85Hz]
offset [0.03]
delta [3.06]
out
-5.8
4
crossover
in
low
freq [295Hz]
high
2
distortion
in
out
gain [14.2dB]
hard [0.50]
asym [0.62]
3
distortion
in
out
gain [15.1dB]
hard [0.49]
asym [0.53]
1
mix
in
out
0
out
in