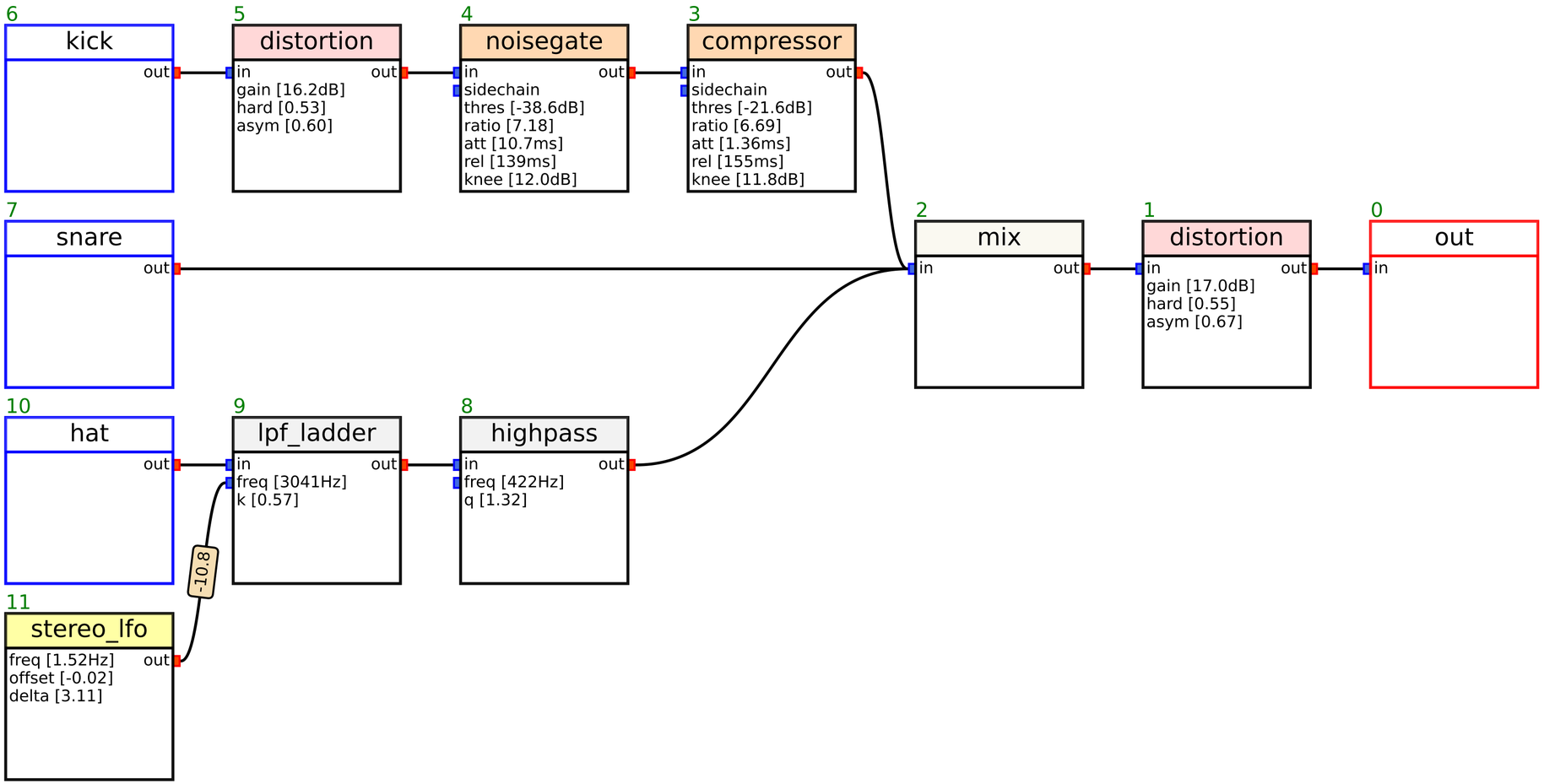
6
kick
out
5
distortion
in
out
gain [16.2dB]
hard [0.53]
asym [0.60]
4
noisegate
in
out
sidechain
thres [-38.6dB]
ratio [7.18]
att [10.7ms]
rel [139ms]
knee [12.0dB]
3
compressor
in
out
sidechain
thres [-21.6dB]
ratio [6.69]
att [1.36ms]
rel [155ms]
knee [11.8dB]
7
snare
out
2
mix
in
out
1
distortion
in
out
gain [17.0dB]
hard [0.55]
asym [0.67]
0
out
in
10
hat
out
9
lpf_ladder
in
out
freq [3041Hz]
k [0.57]
8
highpass
in
out
freq [422Hz]
q [1.32]
-10.8
11
stereo_lfo
freq [1.52Hz]
offset [-0.02]
delta [3.11]
out