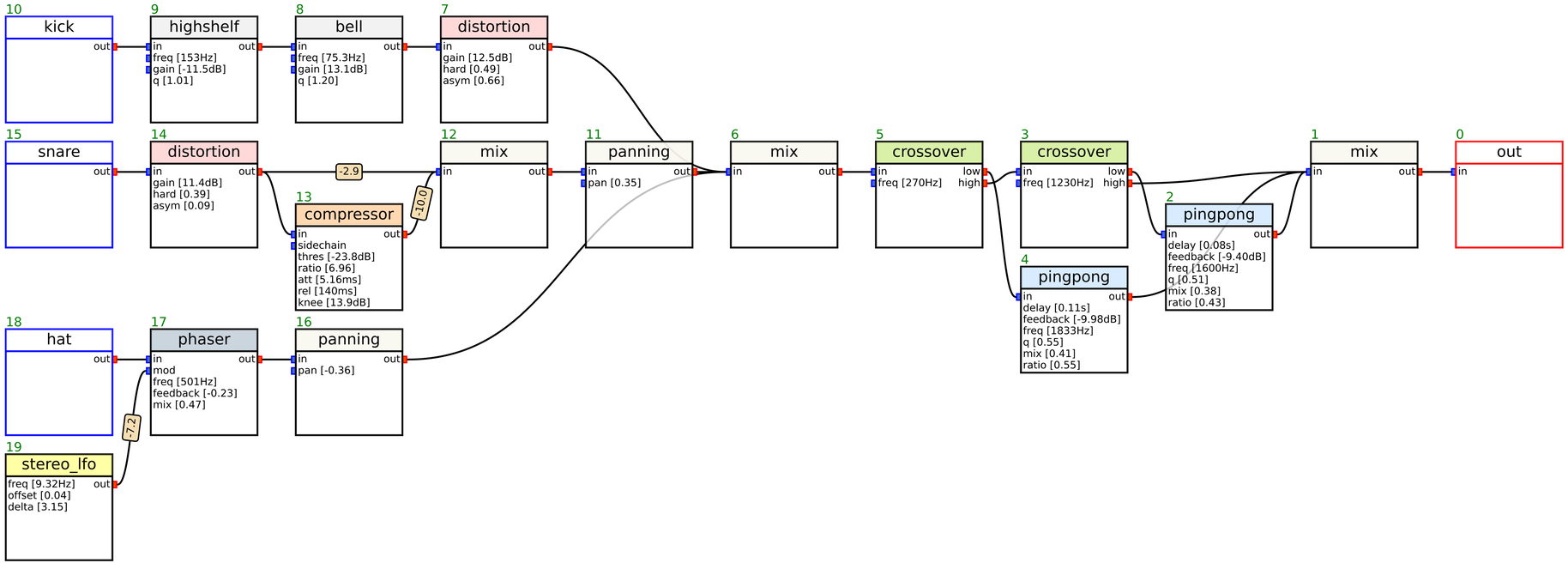
10
kick
out
9
highshelf
in
out
freq [153Hz]
gain [-11.5dB]
q [1.01]
8
bell
in
out
freq [75.3Hz]
gain [13.1dB]
q [1.20]
7
distortion
in
out
gain [12.5dB]
hard [0.49]
asym [0.66]
15
snare
out
14
distortion
in
out
gain [11.4dB]
hard [0.39]
asym [0.09]
-2.9
13
compressor
in
out
sidechain
thres [-23.8dB]
ratio [6.96]
att [5.16ms]
rel [140ms]
knee [13.9dB]
-10.0
12
mix
in
out
11
panning
in
out
pan [0.35]
6
mix
in
out
5
crossover
in
low
freq [270Hz]
high
3
crossover
in
low
freq [1230Hz]
high
4
pingpong
in
out
delay [0.11s]
feedback [-9.98dB]
freq [1833Hz]
q [0.55]
mix [0.41]
ratio [0.55]
2
pingpong
in
out
delay [0.08s]
feedback [-9.40dB]
freq [1600Hz]
q [0.51]
mix [0.38]
ratio [0.43]
1
mix
in
out
0
out
in
18
hat
out
17
phaser
in
out
mod
freq [501Hz]
feedback [-0.23]
mix [0.47]
16
panning
in
out
pan [-0.36]
-7.2
19
stereo_lfo
freq [9.32Hz]
out
offset [0.04]
delta [3.15]