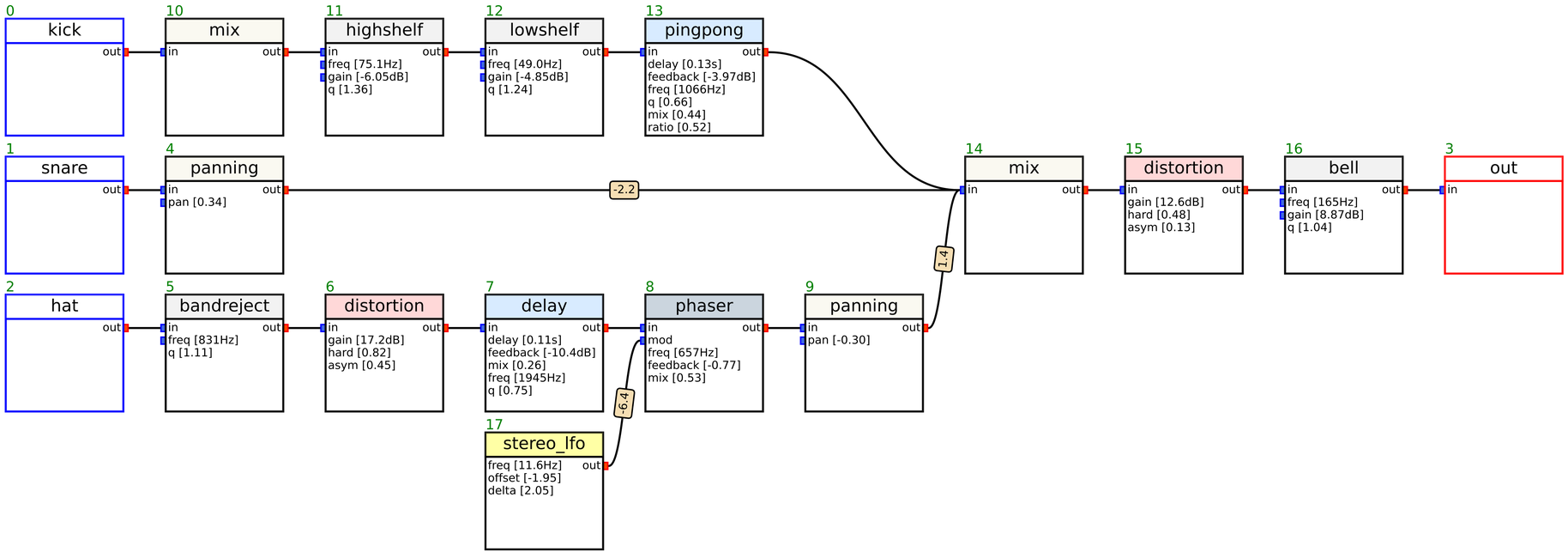
0
kick
out
10
mix
in
out
11
highshelf
in
out
freq [75.1Hz]
gain [-6.05dB]
q [1.36]
12
lowshelf
in
out
freq [49.0Hz]
gain [-4.85dB]
q [1.24]
13
pingpong
in
out
delay [0.13s]
feedback [-3.97dB]
freq [1066Hz]
q [0.66]
mix [0.44]
ratio [0.52]
1
snare
out
4
panning
in
out
pan [0.34]
-2.2
14
mix
in
out
15
distortion
in
out
gain [12.6dB]
hard [0.48]
asym [0.13]
16
bell
in
out
freq [165Hz]
gain [8.87dB]
q [1.04]
3
out
in
1.4
2
hat
out
5
bandreject
in
out
freq [831Hz]
q [1.11]
6
distortion
in
out
gain [17.2dB]
hard [0.82]
asym [0.45]
7
delay
in
out
delay [0.11s]
feedback [-10.4dB]
mix [0.26]
freq [1945Hz]
q [0.75]
8
phaser
in
out
mod
freq [657Hz]
feedback [-0.77]
mix [0.53]
9
panning
in
out
pan [-0.30]
-6.4
17
stereo_lfo
freq [11.6Hz]
offset [-1.95]
delta [2.05]
out