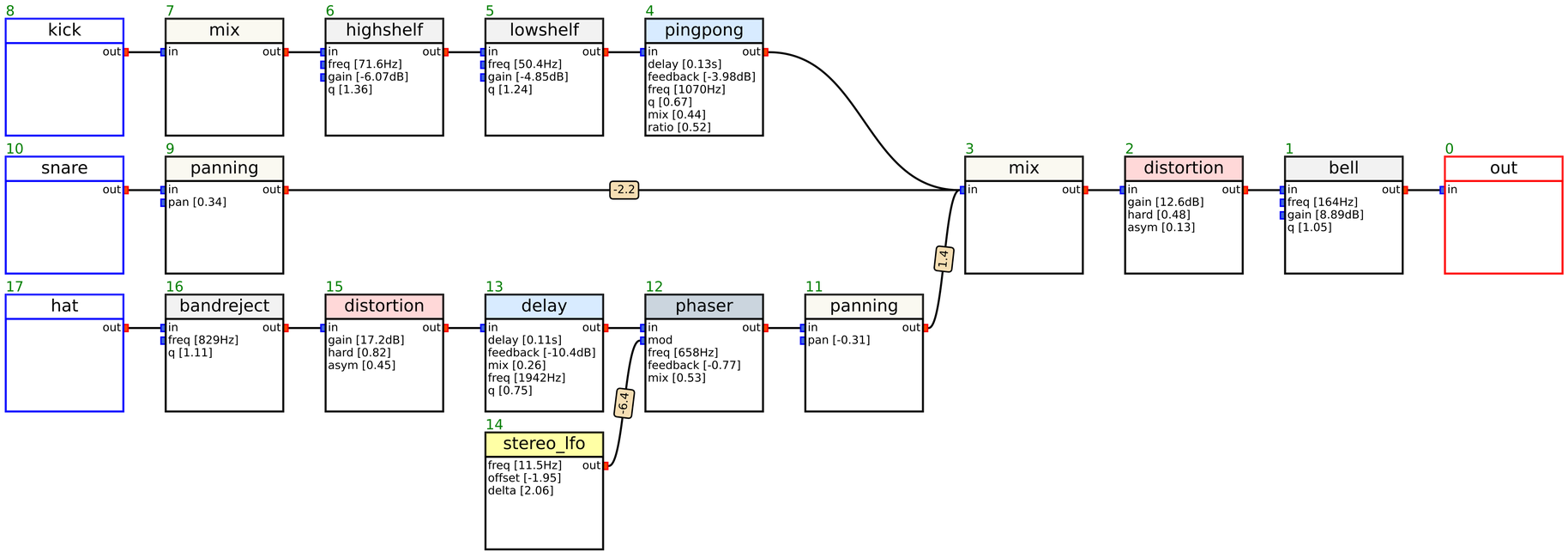
8
kick
out
7
mix
in
out
6
highshelf
in
out
freq [71.6Hz]
gain [-6.07dB]
q [1.36]
5
lowshelf
in
out
freq [50.4Hz]
gain [-4.85dB]
q [1.24]
4
pingpong
in
out
delay [0.13s]
feedback [-3.98dB]
freq [1070Hz]
q [0.67]
mix [0.44]
ratio [0.52]
10
snare
out
9
panning
in
out
pan [0.34]
-2.2
3
mix
in
out
2
distortion
in
out
gain [12.6dB]
hard [0.48]
asym [0.13]
1
bell
in
out
freq [164Hz]
gain [8.89dB]
q [1.05]
0
out
in
1.4
17
hat
out
16
bandreject
in
out
freq [829Hz]
q [1.11]
15
distortion
in
out
gain [17.2dB]
hard [0.82]
asym [0.45]
13
delay
in
out
delay [0.11s]
feedback [-10.4dB]
mix [0.26]
freq [1942Hz]
q [0.75]
12
phaser
in
out
mod
freq [658Hz]
feedback [-0.77]
mix [0.53]
11
panning
in
out
pan [-0.31]
-6.4
14
stereo_lfo
freq [11.5Hz]
out
offset [-1.95]
delta [2.06]