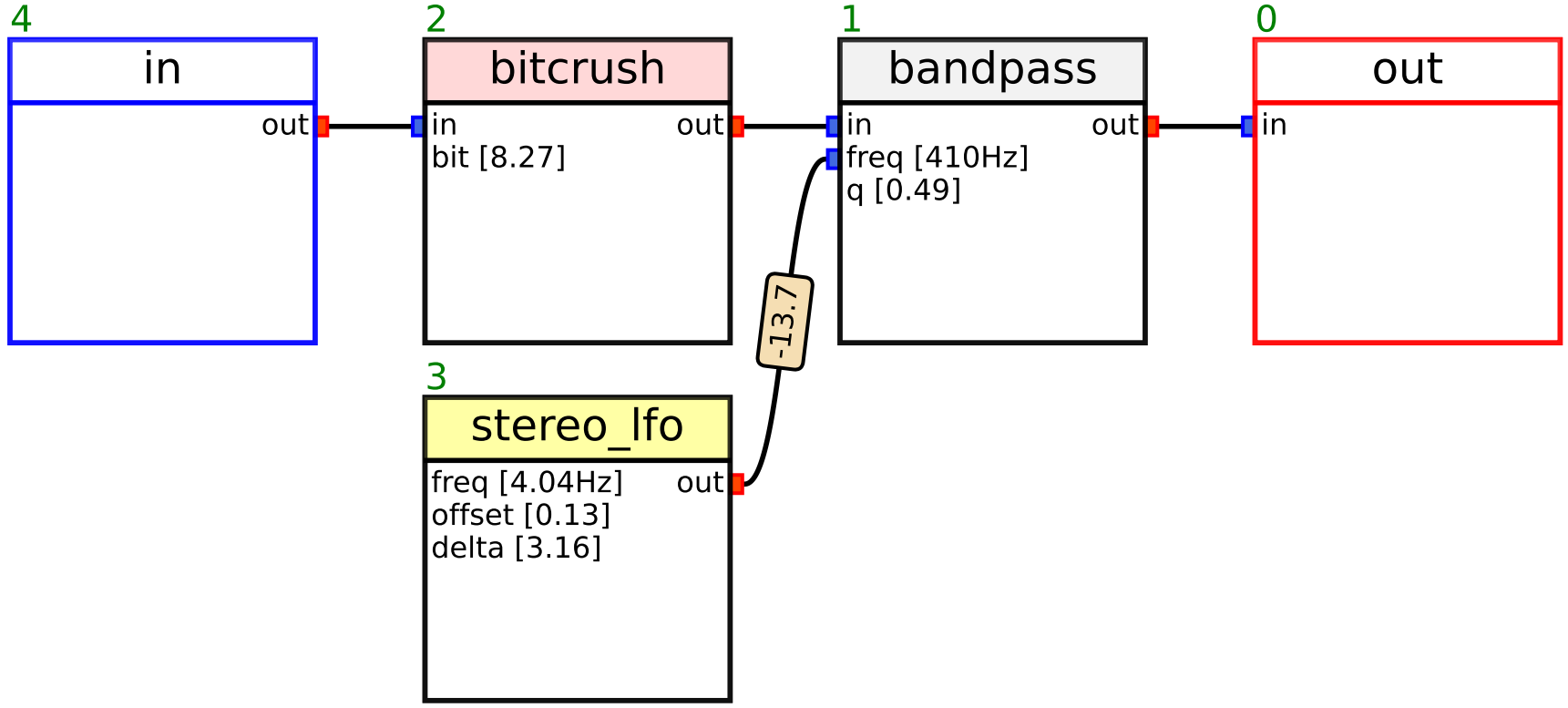
4
in
out
2
bitcrush
in
out
bit [8.27]
1
bandpass
in
out
freq [410Hz]
q [0.49]
0
out
in
-13.7
3
stereo_lfo
freq [4.04Hz]
out
offset [0.13]
delta [3.16]