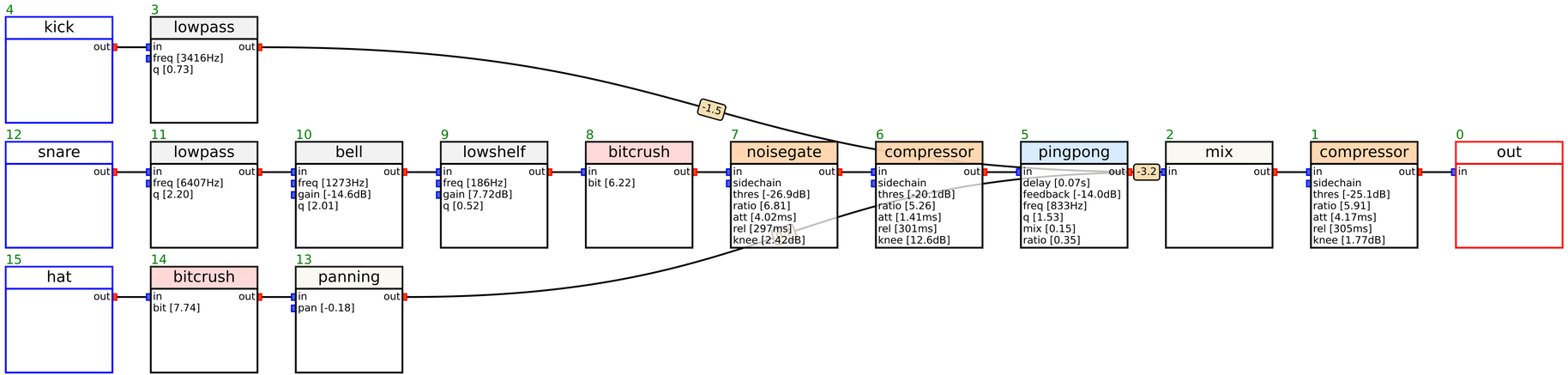
4
kick
out
3
lowpass
in
out
freq [3416Hz]
q [0.73]
-1.5
12
snare
out
11
lowpass
in
out
freq [6407Hz]
q [2.20]
10
bell
in
out
freq [1273Hz]
gain [-14.6dB]
q [2.01]
9
lowshelf
in
out
freq [186Hz]
gain [7.72dB]
q [0.52]
8
bitcrush
in
out
bit [6.22]
7
noisegate
in
out
sidechain
thres [-26.9dB]
ratio [6.81]
att [4.02ms]
rel [297ms]
knee [2.42dB]
6
compressor
in
out
sidechain
thres [-20.1dB]
ratio [5.26]
att [1.41ms]
rel [301ms]
knee [12.6dB]
5
pingpong
in
out
delay [0.07s]
feedback [-14.0dB]
freq [833Hz]
q [1.53]
mix [0.15]
ratio [0.35]
-3.2
2
mix
in
out
1
compressor
in
out
sidechain
thres [-25.1dB]
ratio [5.91]
att [4.17ms]
rel [305ms]
knee [1.77dB]
0
out
in
15
hat
out
14
bitcrush
in
out
bit [7.74]
13
panning
in
out
pan [-0.18]