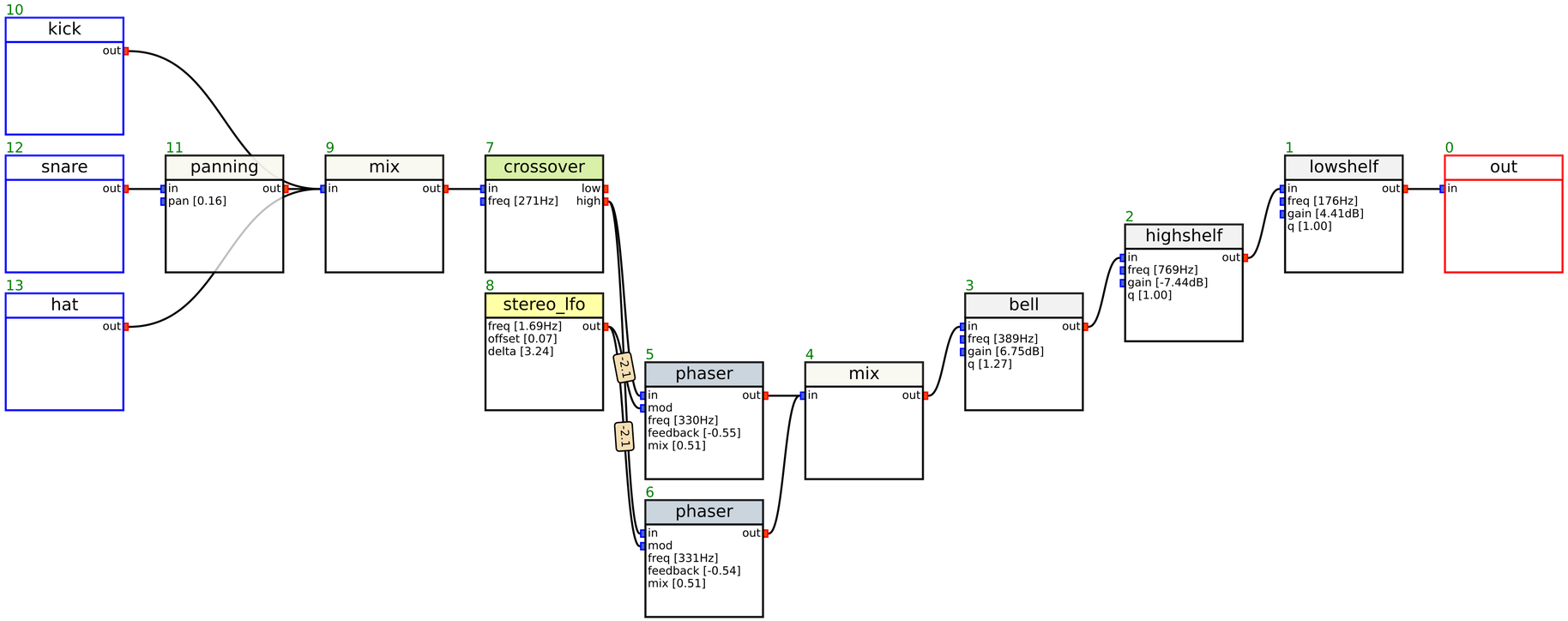
10
kick
out
12
snare
out
13
hat
out
11
panning
in
out
pan [0.16]
9
mix
in
out
7
crossover
in
low
freq [271Hz]
high
8
stereo_lfo
freq [1.69Hz]
offset [0.07]
delta [3.24]
out
-2:1
-2:1
5
phaser
in
out
mod
freq [330Hz]
feedback [-0.55]
mix [0.51]
6
phaser
in
out
mod
freq [331Hz]
feedback [-0.54]
mix [0.51]
4
mix
in
out
3
bell
in
out
freq [389Hz]
gain [6.75dB]
q [1.27]
2
highshelf
in
out
freq [769Hz]
gain [-7.44dB]
q [1.00]
1
lowshelf
in
out
freq [176Hz]
gain [4.41dB]
q [1.00]
0
out
in