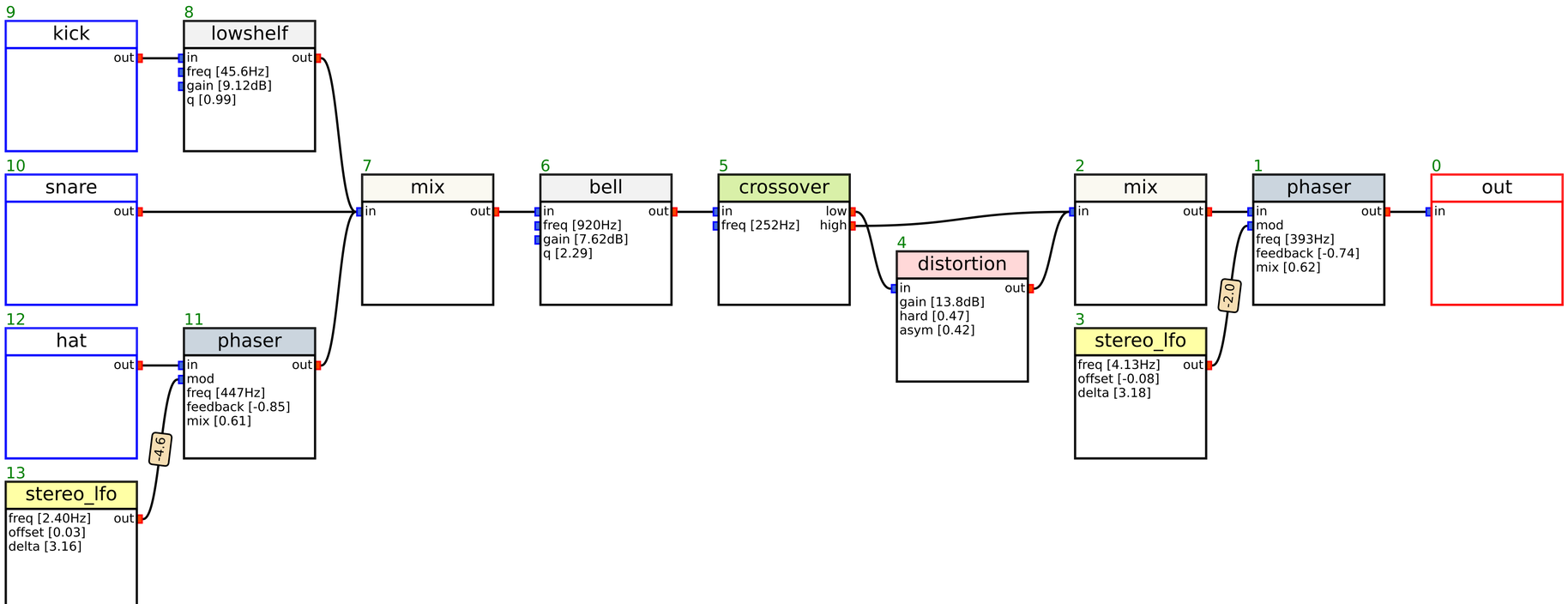
9
kick
out
8
lowshelf
in
out
freq [45.6Hz]
gain [9.12dB]
q [0.99]
10
snare
out
7
mix
in
out
6
bell
in
out
freq [920Hz]
gain [7.62dB]
q [2.29]
5
crossover
in
low
freq [252Hz]
high
4
distortion
in
out
gain [13.8dB]
hard [0.47]
asym [0.42]
2
mix
in
out
1
phaser
in
out
mod
freq [393Hz]
feedback [-0.74]
mix [0.62]
0
out
in
12
hat
out
11
phaser
in
out
mod
freq [447Hz]
feedback [-0.85]
mix [0.61]
-4.6
13
stereo_lfo
freq [2.40Hz]
out
offset [0.03]
delta [3.16]
3
stereo_lfo
freq [4.13Hz]
out
offset [-0.08]
delta [3.18]
-2.0