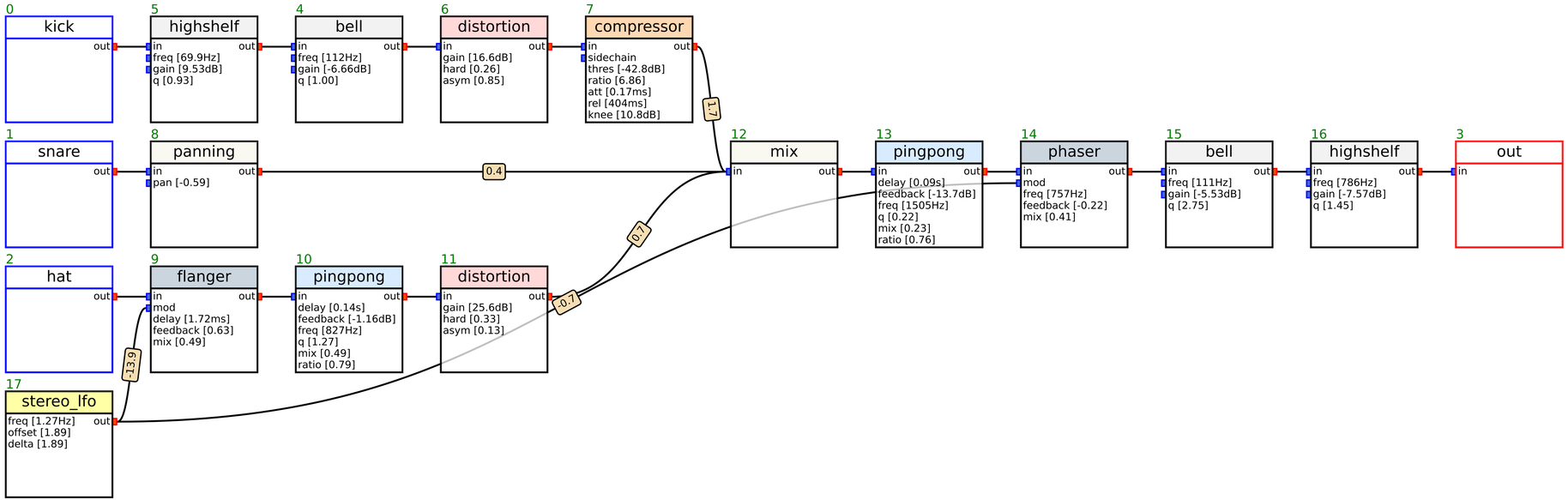
0
kick
out
5
highshelf
in
out
freq [69.9Hz]
gain [9.53dB]
q [0.93]
4
bell
in
out
freq [112Hz]
gain [-6.66dB]
q [1.00]
6
distortion
in
out
gain [16.6dB]
hard [0.26]
asym [0.85]
7
compressor
in
out
sidechain
thres [-42.8dB]
ratio [6.86]
att [0.17ms]
rel [404ms]
knee [10.8dB]
1.7
1
snare
out
8
panning
in
out
pan [-0.59]
0.4
12
mix
in
out
13
pingpong
in
out
delay [0.09s]
feedback [-13.7dB]
freq [1505Hz]
q [0.22]
mix [0.23]
ratio [0.76]
14
phaser
in
out
mod
freq [757Hz]
feedback [-0.22]
mix [0.41]
15
bell
in
out
freq [111Hz]
gain [-5.53dB]
q [2.75]
16
highshelf
in
out
freq [786Hz]
gain [-7.57dB]
q [1.45]
3
out
in
0.7
2
hat
out
9
flanger
in
out
mod
delay [1.72ms]
feedback [0.63]
mix [0.49]
10
pingpong
in
out
delay [0.14s]
feedback [-1.16dB]
freq [827Hz]
q [1.27]
mix [0.49]
ratio [0.79]
11
distortion
in
out
gain [25.6dB]
hard [0.33]
asym [0.13]
0.7
-13.9
17
stereo_lfo
freq [1.27Hz]
offset [1.89]
delta [1.89]
out