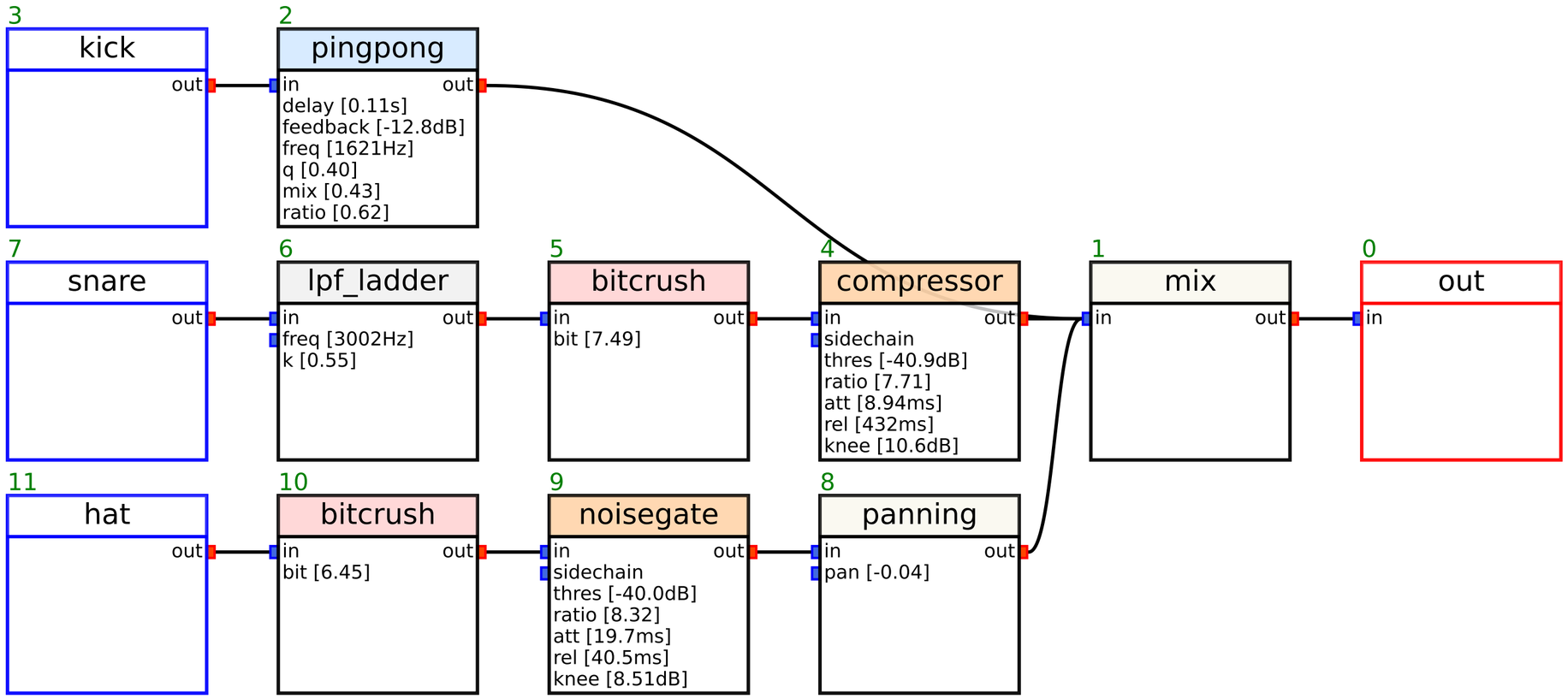
3
kick
out
2
pingpong
in
out
delay [0.11s]
feedback [-12.8dB]
freq [1621Hz]
q [0.40]
mix [0.43]
ratio [0.62]
7
snare
out
6
lpf_ladder
in
out
freq [3002Hz]
k [0.55]
5
bitcrush
in
out
bit [7.49]
4
compressor
in
out
sidechain
thres [-40.9dB]
ratio [7.71]
att [8.94ms]
rel [432ms]
knee [10.6dB]
1
mix
in
out
0
out
in
11
hat
out
10
bitcrush
in
out
bit [6.45]
9
noisegate
in
out
sidechain
thres [-40.0dB]
ratio [8.32]
att [19.7ms]
rel [40.5ms]
knee [8.51dB]
8
panning
in
out
pan [-0.04]