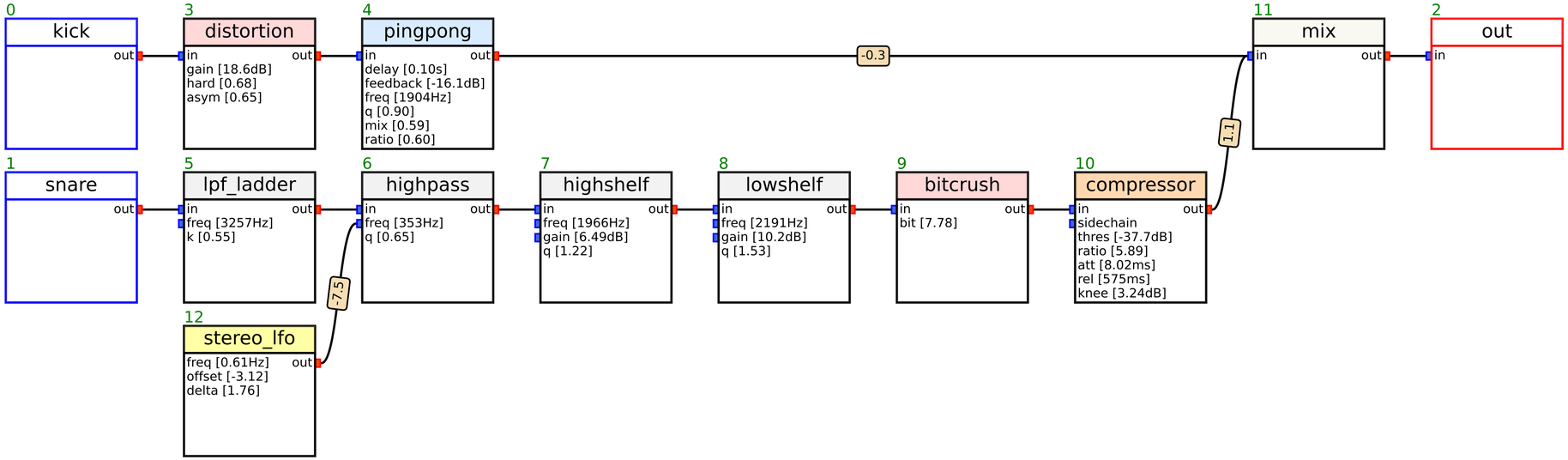
0
kick
out
3
distortion
in
out
gain [18.6dB]
hard [0.68]
asym [0.65]
4
pingpong
in
out
delay [0.10s]
feedback [-16.1dB]
freq [1904Hz]
q [0.90]
mix [0.59]
ratio [0.60]
-0.3
11
mix
in
out
2
out
in
1
snare
out
5
lpf_ladder
in
out
freq [3257Hz]
k [0.55]
6
highpass
in
out
freq [353Hz]
q [0.65]
7
highshelf
in
out
freq [1966Hz]
gain [6.49dB]
q [1.22]
8
lowshelf
in
out
freq [2191Hz]
gain [10.2dB]
q [1.53]
9
bitcrush
in
out
bit [7.78]
10
compressor
in
out
sidechain
thres [-37.7dB]
ratio [5.89]
att [8.02ms]
rel [575ms]
knee [3.24dB]
1.1
-7.5
12
stereo_lfo
out
freq [0.61Hz]
offset [-3.12]
delta [1.76]