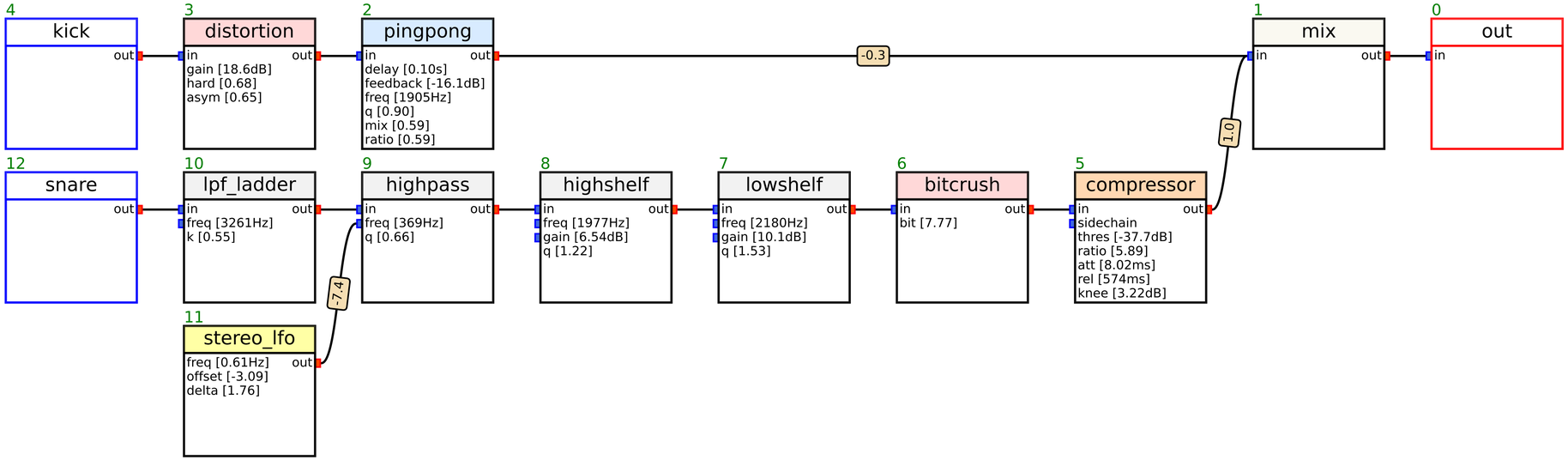
4
kick
out
3
distortion
in
out
gain [18.6dB]
hard [0.68]
asym [0.65]
2
pingpong
in
out
delay [0.10s]
feedback [-16.1dB]
freq [1905Hz]
q [0.90]
mix [0.59]
ratio [0.59]
-0.3
1
mix
in
out
0
out
in
12
snare
out
10
lpf_ladder
in
out
freq [3261Hz]
k [0.55]
9
highpass
in
out
freq [369Hz]
q [0.66]
8
highshelf
in
out
freq [1977Hz]
gain [6.54dB]
q [1.22]
7
lowshelf
in
out
freq [2180Hz]
gain [10.1dB]
q [1.53]
6
bitcrush
in
out
bit [7.77]
5
compressor
in
out
sidechain
thres [-37.7dB]
ratio [5.89]
att [8.02ms]
rel [574ms]
knee [3.22dB]
1.0
-7.4
11
stereo_lfo
out
freq [0.61Hz]
offset [-3.09]
delta [1.76]