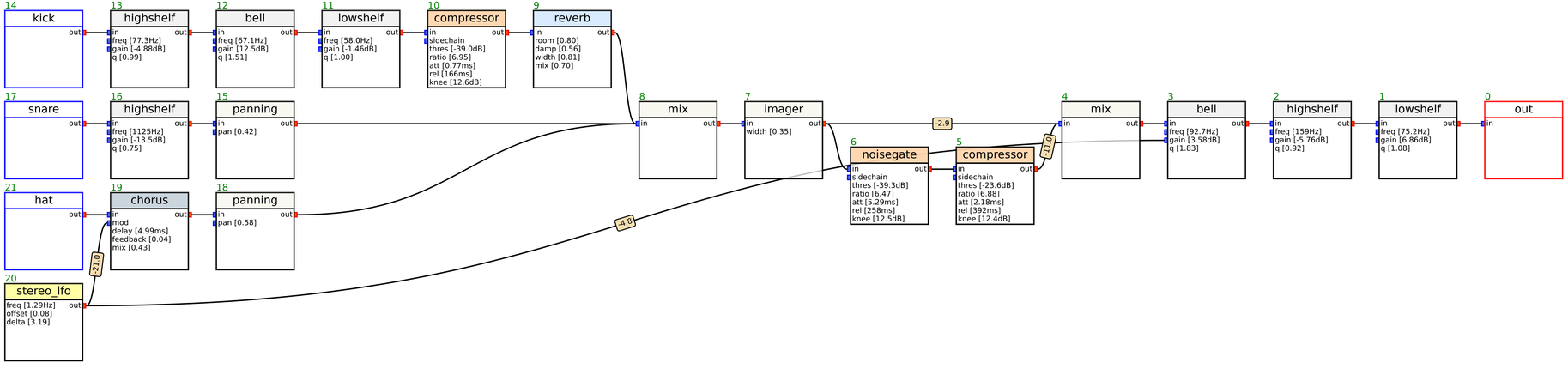
14
kick
out
13
highshelf
in
freq [77.3Hz]
gain [-4.88dB]
q [0.99]
out
12
bell
in
freq [67.1Hz]
gain [12.5dB]
q [1.51]
out
11
lowshelf
in
freq [58.0Hz]
gain [-1.46dB]
q [1.00]
out
10
compressor
in
sidechain
thres [-39.0dB]
ratio [6.95]
att [0.77ms]
rel [166ms]
knee [12.6dB]
out
9
reverb
in
room [0.80]
damp [0.56]
width [0.81]
mix [0.70]
out
17
snare
out
16
highshelf
in
freq [1125Hz]
gain [-13.5dB]
q [0.75]
out
15
panning
in
pan [0.42]
out
8
mix
in
out
7
imager
in
width [0.35]
out
-2.9
6
noisegate
in
sidechain
thres [-39.3dB]
ratio [6.47]
att [5.29ms]
rel [258ms]
knee [12.5dB]
out
5
compressor
in
sidechain
thres [-23.6dB]
ratio [6.88]
att [2.18ms]
rel [392ms]
knee [12.4dB]
out
-7.0
4
mix
in
out
3
bell
in
freq [92.7Hz]
gain [3.58dB]
q [1.83]
out
2
highshelf
in
freq [159Hz]
gain [-5.76dB]
q [0.92]
out
1
lowshelf
in
freq [75.2Hz]
gain [6.86dB]
q [1.08]
out
0
out
in
21
hat
out
19
chorus
in
mod
delay [4.99ms]
feedback [0.04]
mix [0.43]
out
18
panning
in
pan [0.58]
out
-4.8
-2.0
20
stereo_lfo
freq [1.29Hz]
offset [0.08]
delta [3.19]
out