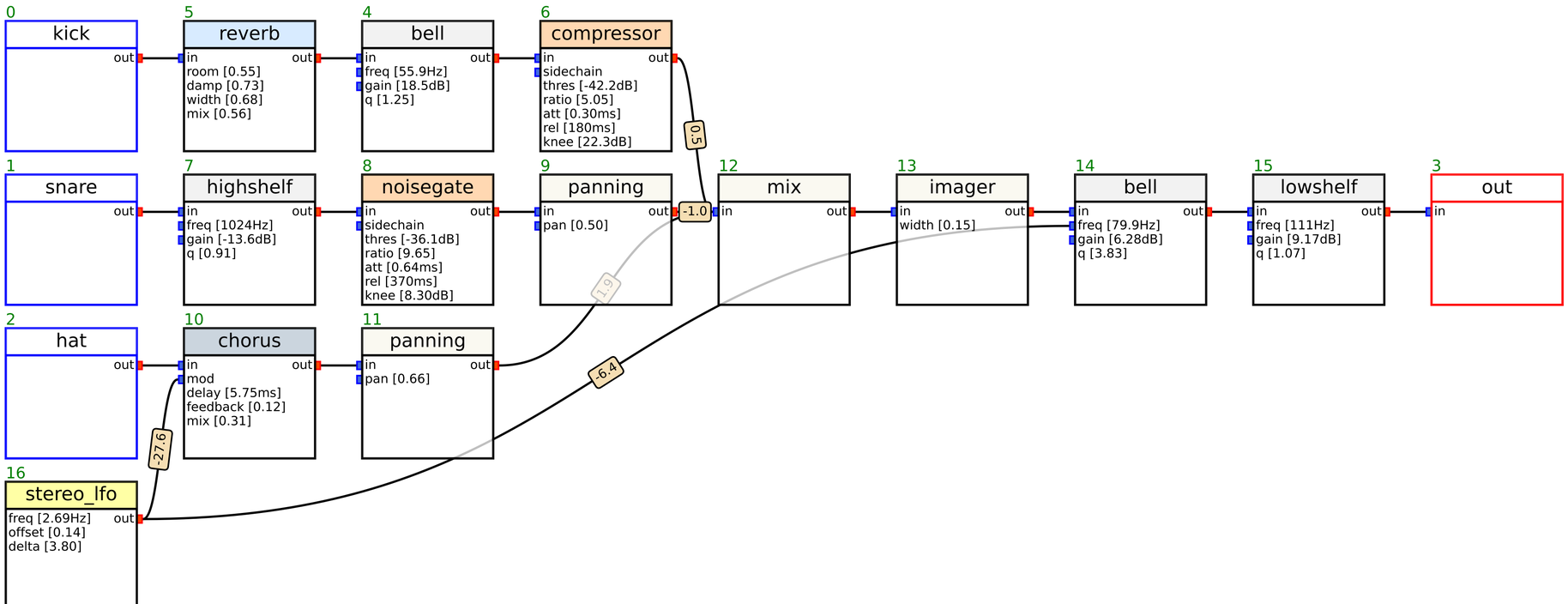
0
kick
out
5
reverb
in
out
room [0.55]
damp [0.73]
width [0.68]
mix [0.56]
4
bell
in
out
freq [55.9Hz]
gain [18.5dB]
q [1.25]
6
compressor
in
out
sidechain
thres [-42.2dB]
ratio [5.05]
att [0.30ms]
rel [180ms]
knee [22.3dB]
-0.5
1
snare
out
7
highshelf
in
out
freq [1024Hz]
gain [-13.6dB]
q [0.91]
8
noisegate
in
out
sidechain
thres [-36.1dB]
ratio [9.65]
att [0.64ms]
rel [370ms]
knee [8.30dB]
9
panning
in
out
pan [0.50]
-1.0
-1.9
12
mix
in
out
13
imager
in
out
width [0.15]
14
bell
in
out
freq [79.9Hz]
gain [6.28dB]
q [3.83]
15
lowshelf
in
out
freq [111Hz]
gain [9.17dB]
q [1.07]
3
out
in
2
hat
out
10
chorus
in
out
mod
delay [5.75ms]
feedback [0.12]
mix [0.31]
11
panning
in
out
pan [0.66]
-6.4
-27.6
16
stereo_lfo
freq [2.69Hz]
offset [0.14]
delta [3.80]
out