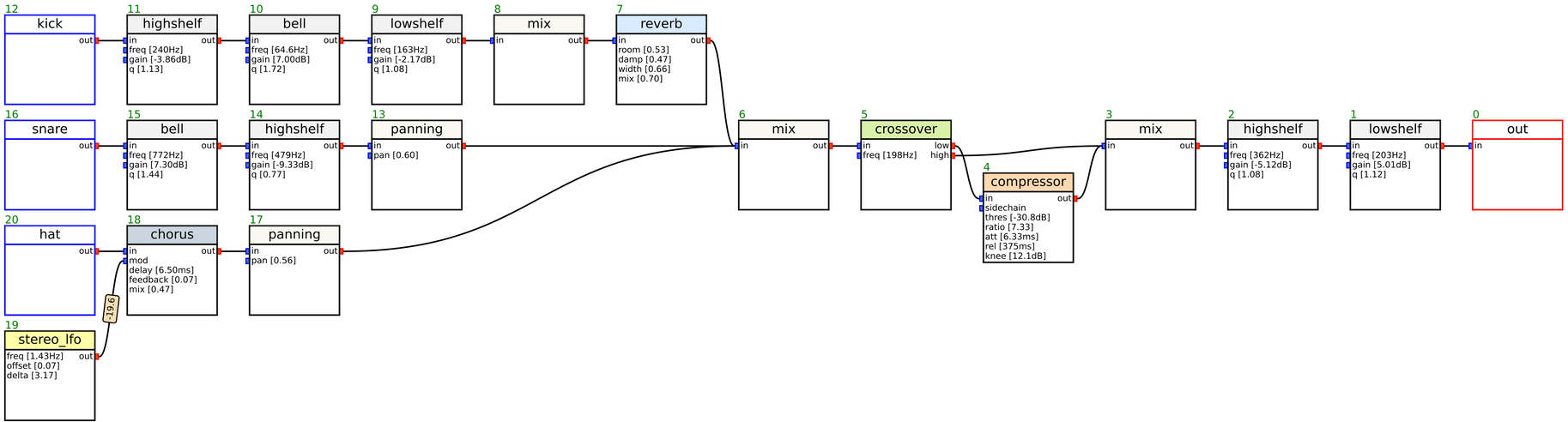
12
kick
out
11
highshelf
in
out
freq [240Hz]
gain [-3.86dB]
q [1.13]
10
bell
in
out
freq [64.6Hz]
gain [7.00dB]
q [1.72]
9
lowshelf
in
out
freq [163Hz]
gain [-2.17dB]
q [1.08]
8
mix
in
out
7
reverb
in
out
room [0.53]
damp [0.47]
width [0.66]
mix [0.70]
16
snare
out
15
bell
in
out
freq [772Hz]
gain [7.30dB]
q [1.44]
14
highshelf
in
out
freq [479Hz]
gain [-9.33dB]
q [0.77]
13
panning
in
out
pan [0.60]
6
mix
in
out
5
crossover
in
low
high
freq [198Hz]
4
compressor
in
out
sidechain
thres [-30.8dB]
ratio [7.33]
att [6.33ms]
rel [375ms]
knee [12.1dB]
3
mix
in
out
2
highshelf
in
out
freq [362Hz]
gain [-5.12dB]
q [1.08]
1
lowshelf
in
out
freq [203Hz]
gain [5.01dB]
q [1.12]
0
out
in
20
hat
out
18
chorus
in
out
mod
delay [6.50ms]
feedback [0.07]
mix [0.47]
17
panning
in
out
pan [0.56]
-19.6
19
stereo_lfo
freq [1.43Hz]
out
offset [0.07]
delta [3.17]