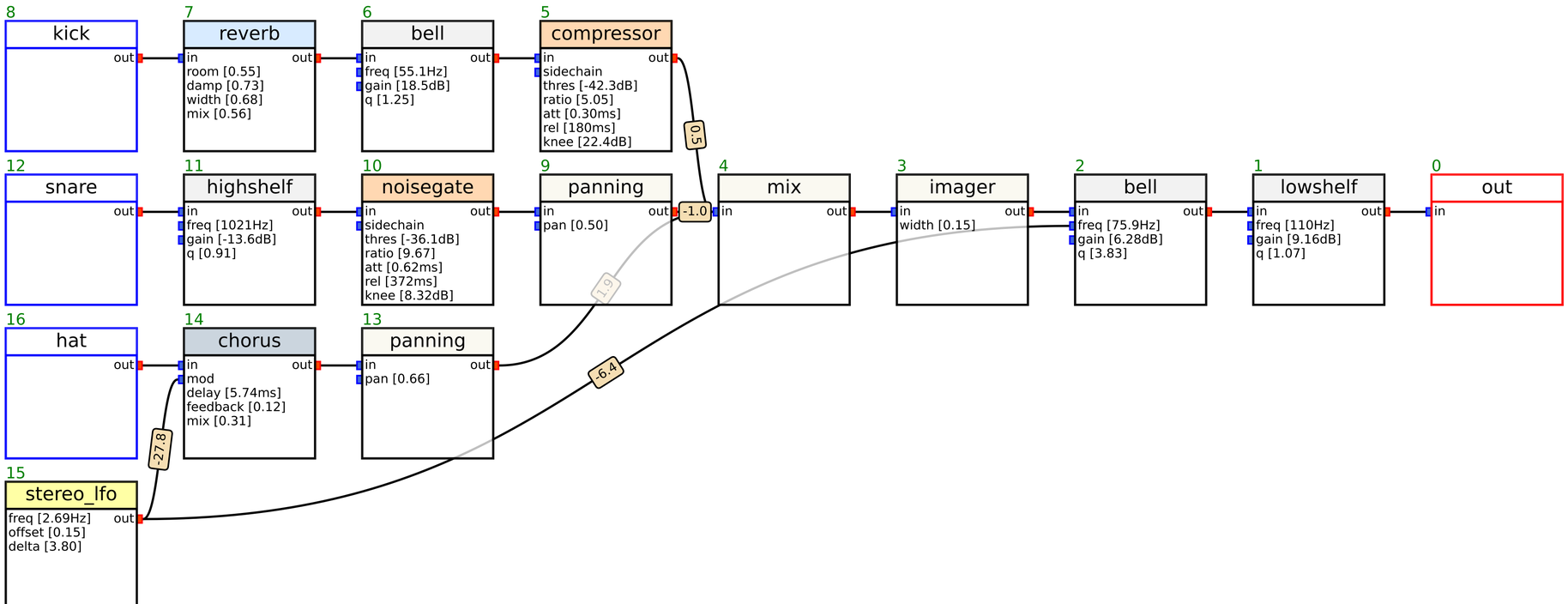
8
kick
out
7
reverb
in
out
room [0.55]
damp [0.73]
width [0.68]
mix [0.56]
6
bell
in
out
freq [55.1Hz]
gain [18.5dB]
q [1.25]
5
compressor
in
out
sidechain
thres [-42.3dB]
ratio [5.05]
att [0.30ms]
rel [180ms]
knee [22.4dB]
-0.5
12
snare
out
11
highshelf
in
out
freq [1021Hz]
gain [-13.6dB]
q [0.91]
10
noisegate
in
out
sidechain
thres [-36.1dB]
ratio [9.67]
att [0.62ms]
rel [372ms]
knee [8.32dB]
9
panning
in
out
pan [0.50]
-1.0
-1.9
4
mix
in
out
3
imager
in
out
width [0.15]
2
bell
in
out
freq [75.9Hz]
gain [6.28dB]
q [3.83]
1
lowshelf
in
out
freq [110Hz]
gain [9.16dB]
q [1.07]
0
out
in
16
hat
out
14
chorus
in
out
mod
delay [5.74ms]
feedback [0.12]
mix [0.31]
13
panning
in
out
pan [0.66]
-6.4
-27.8
15
stereo_lfo
freq [2.69Hz]
offset [0.15]
delta [3.80]
out