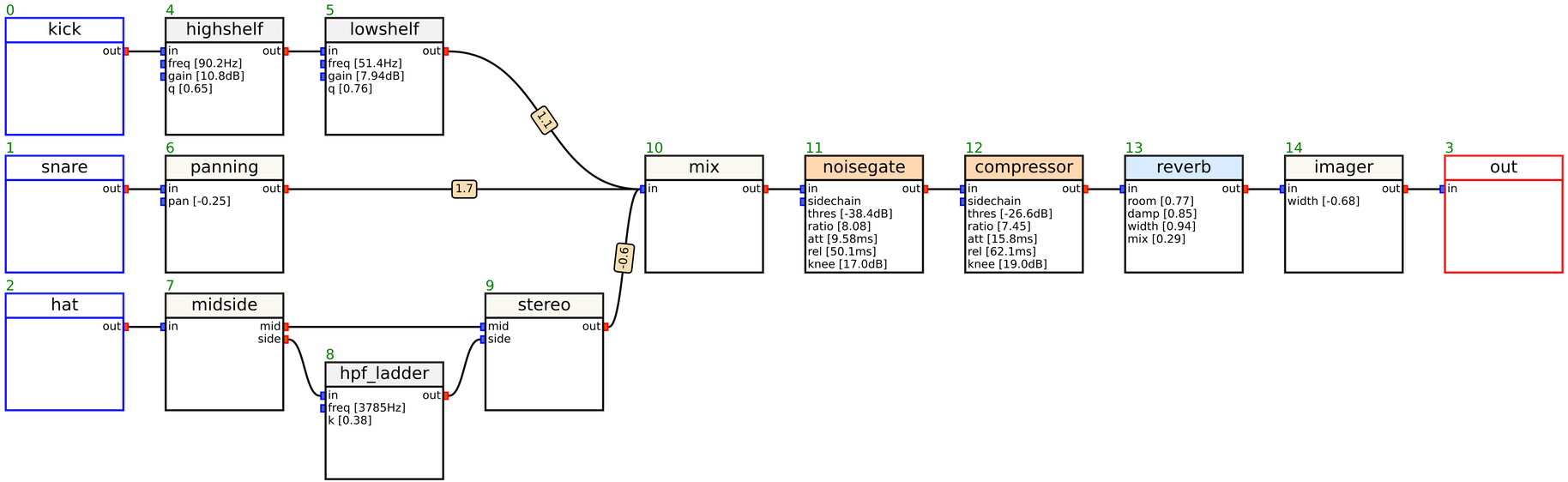
0
kick
out
4
highshelf
in
out
freq [90.2Hz]
gain [10.8dB]
q [0.65]
5
lowshelf
in
out
freq [51.4Hz]
gain [7.94dB]
q [0.76]
1.1
1
snare
out
6
panning
in
out
pan [-0.25]
1.7
2
hat
out
7
midside
in
mid
side
8
hpf_ladder
in
out
freq [3785Hz]
k [0.38]
9
stereo
mid
side
out
0.6
10
mix
in
out
11
noisegate
in
out
sidechain
thres [-38.4dB]
ratio [8.08]
att [9.58ms]
rel [50.1ms]
knee [17.0dB]
12
compressor
in
out
sidechain
thres [-26.6dB]
ratio [7.45]
att [15.8ms]
rel [62.1ms]
knee [19.0dB]
13
reverb
in
out
room [0.77]
damp [0.85]
width [0.94]
mix [0.29]
14
imager
in
out
width [-0.68]
3
out
in