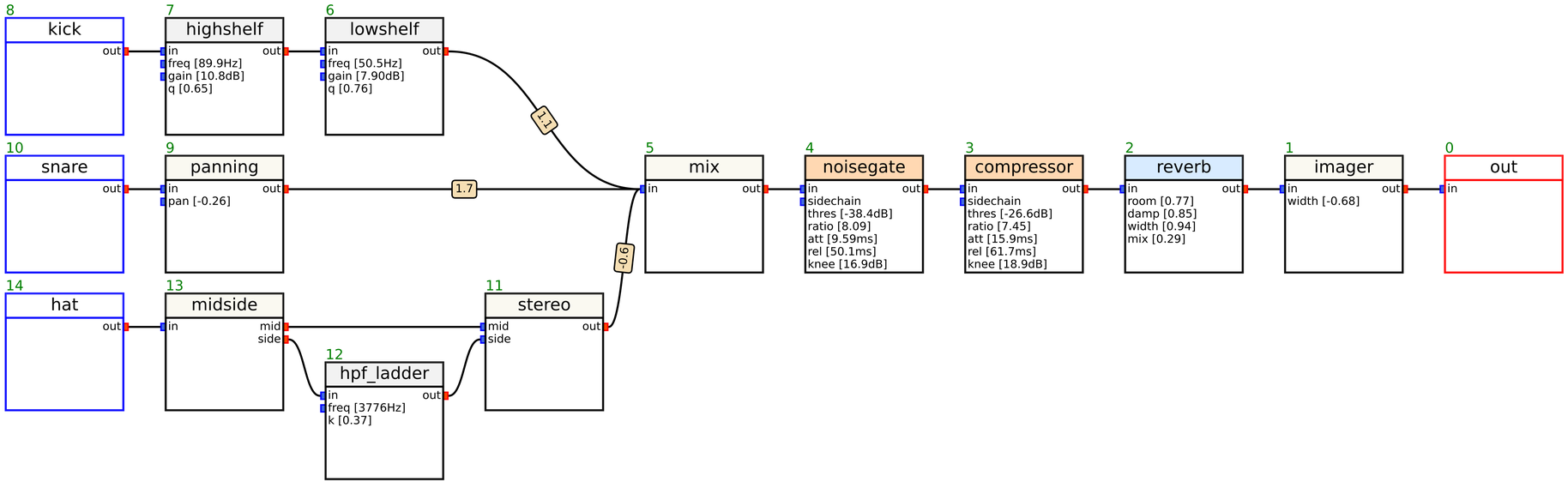
8
kick
out
7
highshelf
in
out
freq [89.9Hz]
gain [10.8dB]
q [0.65]
6
lowshelf
in
out
freq [50.5Hz]
gain [7.90dB]
q [0.76]
1.1
10
snare
out
9
panning
in
out
pan [-0.26]
1.7
5
mix
in
out
0.6
14
hat
out
13
midside
in
mid
side
11
stereo
mid
side
out
12
hpf_ladder
in
out
freq [3776Hz]
k [0.37]
4
noisegate
in
out
sidechain
thres [-38.4dB]
ratio [8.09]
att [9.59ms]
rel [50.1ms]
knee [16.9dB]
3
compressor
in
out
sidechain
thres [-26.6dB]
ratio [7.45]
att [15.9ms]
rel [61.7ms]
knee [18.9dB]
2
reverb
in
out
room [0.77]
damp [0.85]
width [0.94]
mix [0.29]
1
imager
in
out
width [-0.68]
0
out
in