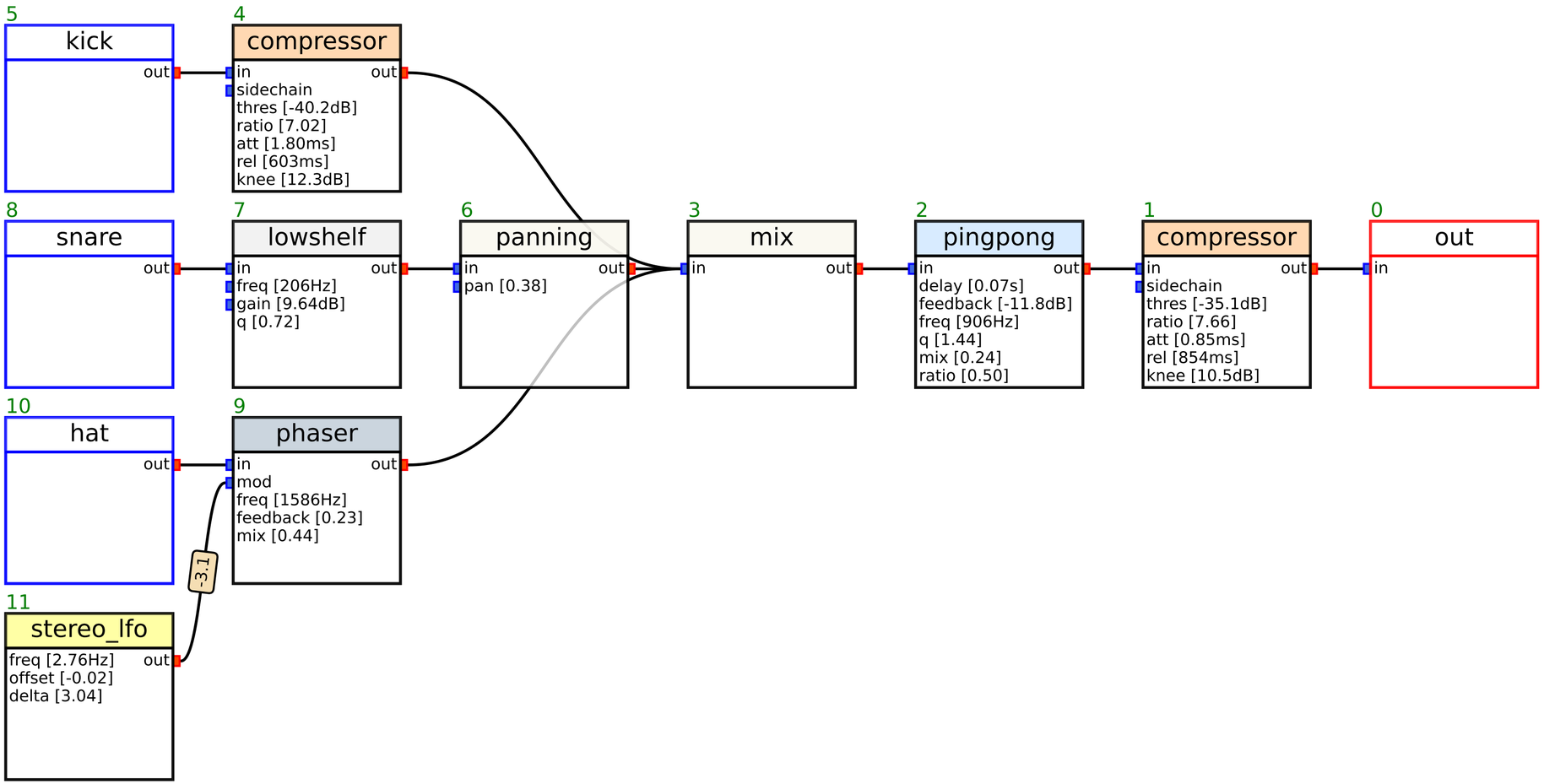
5
kick
out
4
compressor
in
out
sidechain
thres [-40.2dB]
ratio [7.02]
att [1.80ms]
rel [603ms]
knee [12.3dB]
8
snare
out
7
lowshelf
in
out
freq [206Hz]
gain [9.64dB]
q [0.72]
6
panning
in
out
pan [0.38]
3
mix
in
out
2
pingpong
in
out
delay [0.07s]
feedback [-11.8dB]
freq [906Hz]
q [1.44]
mix [0.24]
ratio [0.50]
1
compressor
in
out
sidechain
thres [-35.1dB]
ratio [7.66]
att [0.85ms]
rel [854ms]
knee [10.5dB]
0
out
in
10
hat
out
9
phaser
in
out
mod
freq [1586Hz]
feedback [0.23]
mix [0.44]
-3.1
11
stereo_lfo
freq [2.76Hz]
offset [-0.02]
delta [3.04]
out