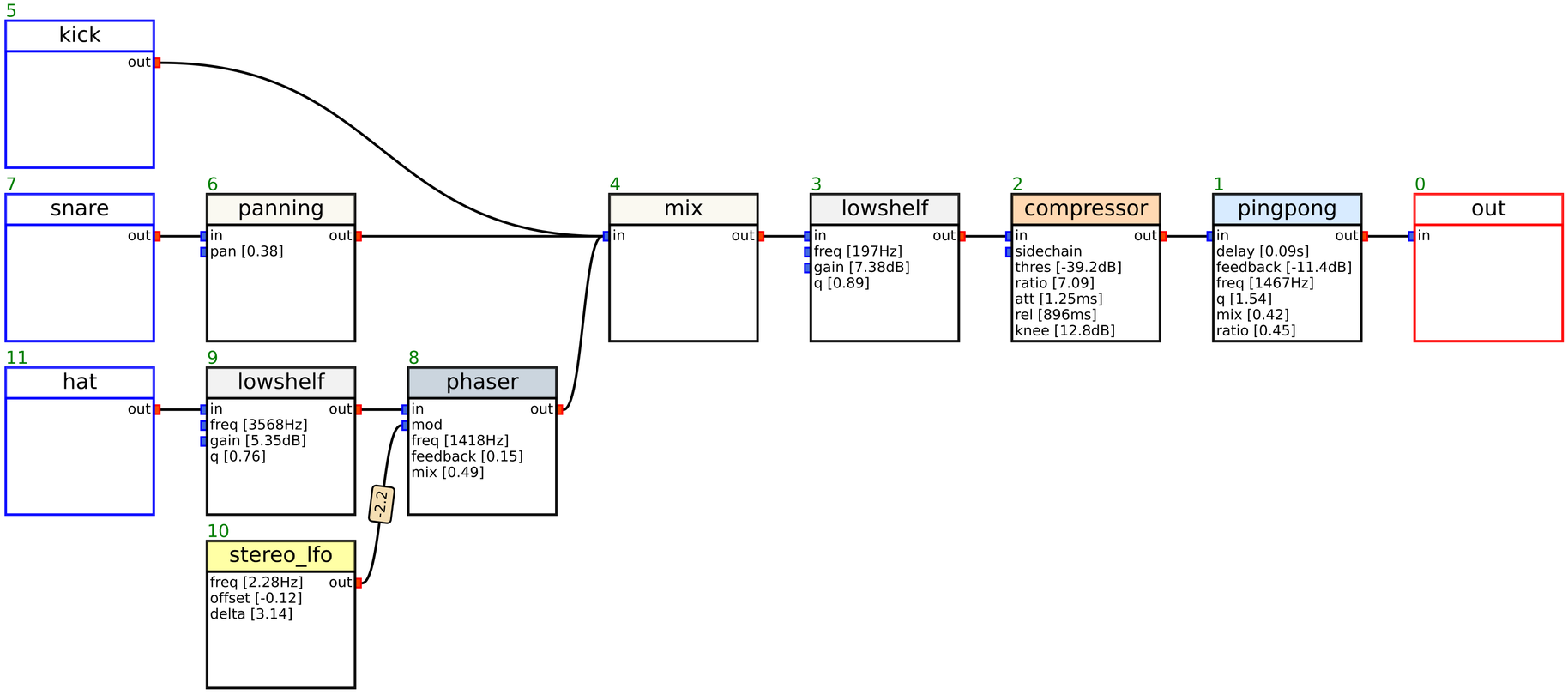
5
kick
out
7
snare
out
6
panning
in
out
pan [0.38]
4
mix
in
out
3
lowshelf
in
out
freq [197Hz]
gain [7.38dB]
q [0.89]
2
compressor
in
out
sidechain
thres [-39.2dB]
ratio [7.09]
att [1.25ms]
rel [896ms]
knee [12.8dB]
1
pingpong
in
out
delay [0.09s]
feedback [-11.4dB]
freq [1467Hz]
q [1.54]
mix [0.42]
ratio [0.45]
0
out
in
11
hat
out
9
lowshelf
in
out
freq [3568Hz]
gain [5.35dB]
q [0.76]
8
phaser
in
out
mod
freq [1418Hz]
feedback [0.15]
mix [0.49]
-2.2
10
stereo_lfo
freq [2.28Hz]
out
offset [-0.12]
delta [3.14]