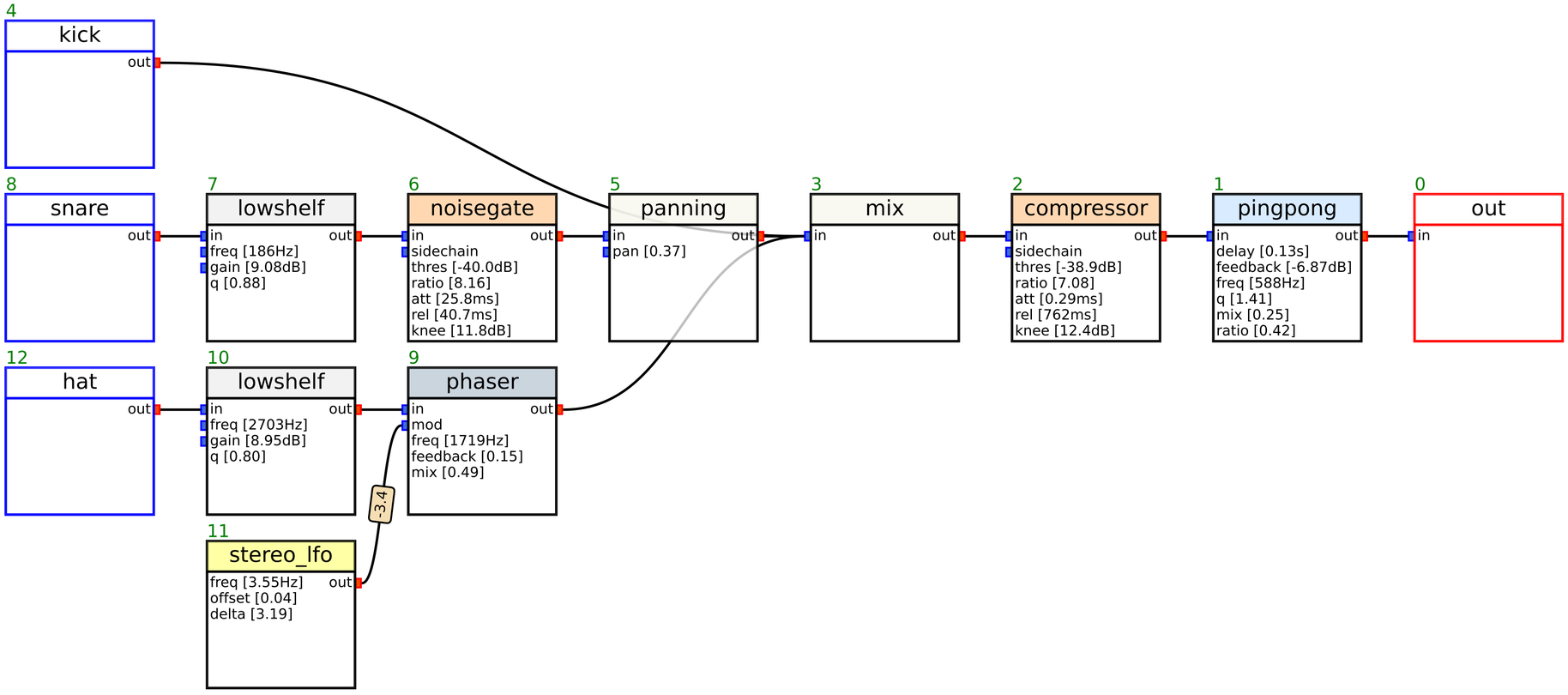
4
kick
out
8
snare
out
7
lowshelf
in
out
freq [186Hz]
gain [9.08dB]
q [0.88]
6
noisegate
in
out
sidechain
thres [-40.0dB]
ratio [8.16]
att [25.8ms]
rel [40.7ms]
knee [11.8dB]
5
panning
in
out
pan [0.37]
3
mix
in
out
2
compressor
in
out
sidechain
thres [-38.9dB]
ratio [7.08]
att [0.29ms]
rel [762ms]
knee [12.4dB]
1
pingpong
in
out
delay [0.13s]
feedback [-6.87dB]
freq [588Hz]
q [1.41]
mix [0.25]
ratio [0.42]
0
out
in
12
hat
out
10
lowshelf
in
out
freq [2703Hz]
gain [8.95dB]
q [0.80]
9
phaser
in
out
mod
freq [1719Hz]
feedback [0.15]
mix [0.49]
-3.4
11
stereo_lfo
freq [3.55Hz]
out
offset [0.04]
delta [3.19]