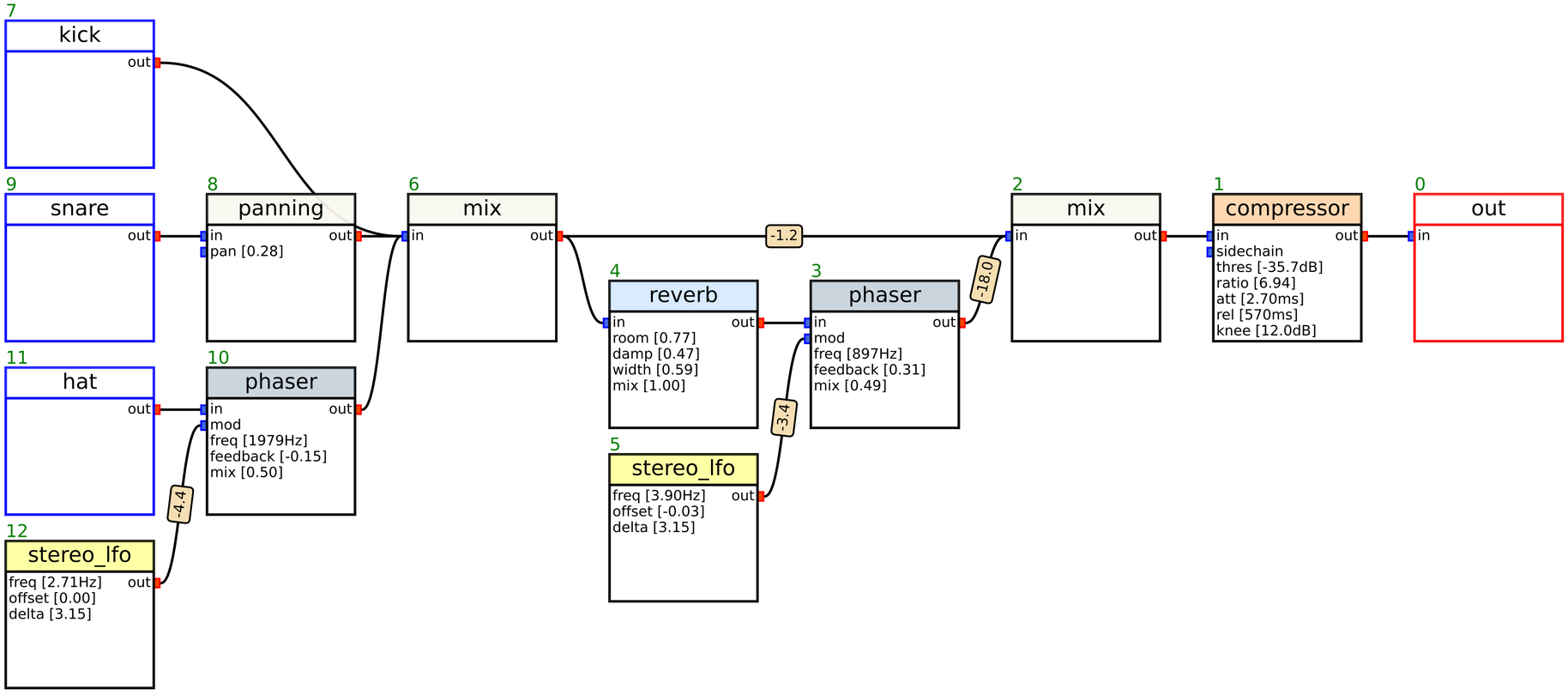
7
kick
out
9
snare
out
11
hat
out
12
stereo_lfo
freq [2.71Hz]
offset [0.00]
delta [3.15]
out
8
panning
in
out
pan [0.28]
10
phaser
in
out
mod
freq [1979Hz]
feedback [-0.15]
mix [0.50]
-4.4
6
mix
in
out
-1.2
4
reverb
in
out
room [0.77]
damp [0.47]
width [0.59]
mix [1.00]
5
stereo_lfo
freq [3.90Hz]
offset [-0.03]
delta [3.15]
out
-3.4
3
phaser
in
out
mod
freq [897Hz]
feedback [0.31]
mix [0.49]
-18.0
2
mix
in
out
1
compressor
in
out
sidechain
thres [-35.7dB]
ratio [6.94]
att [2.70ms]
rel [570ms]
knee [12.0dB]
0
out
in