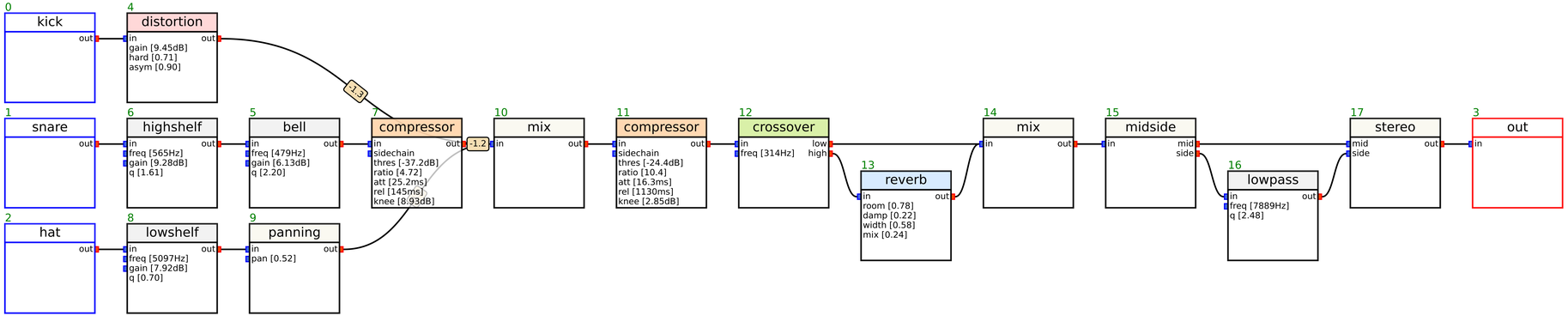
0
kick
out
4
distortion
in
out
gain [9.45dB]
hard [0.71]
asym [0.90]
-1.3
1
snare
out
6
highshelf
in
out
freq [565Hz]
gain [9.28dB]
q [1.61]
5
bell
in
out
freq [479Hz]
gain [6.13dB]
q [2.20]
7
compressor
in
out
sidechain
thres [-37.2dB]
ratio [4.72]
att [25.2ms]
rel [145ms]
knee [8.93dB]
-1.2
10
mix
in
out
11
compressor
in
out
sidechain
thres [-24.4dB]
ratio [10.4]
att [16.3ms]
rel [1130ms]
knee [2.85dB]
12
crossover
in
low
high
freq [314Hz]
2
hat
out
8
lowshelf
in
out
freq [5097Hz]
gain [7.92dB]
q [0.70]
9
panning
in
out
pan [0.52]
13
reverb
in
out
room [0.78]
damp [0.22]
width [0.58]
mix [0.24]
14
mix
in
out
15
midside
in
mid
side
16
lowpass
in
out
freq [7889Hz]
q [2.48]
17
stereo
mid
side
out
3
out
in