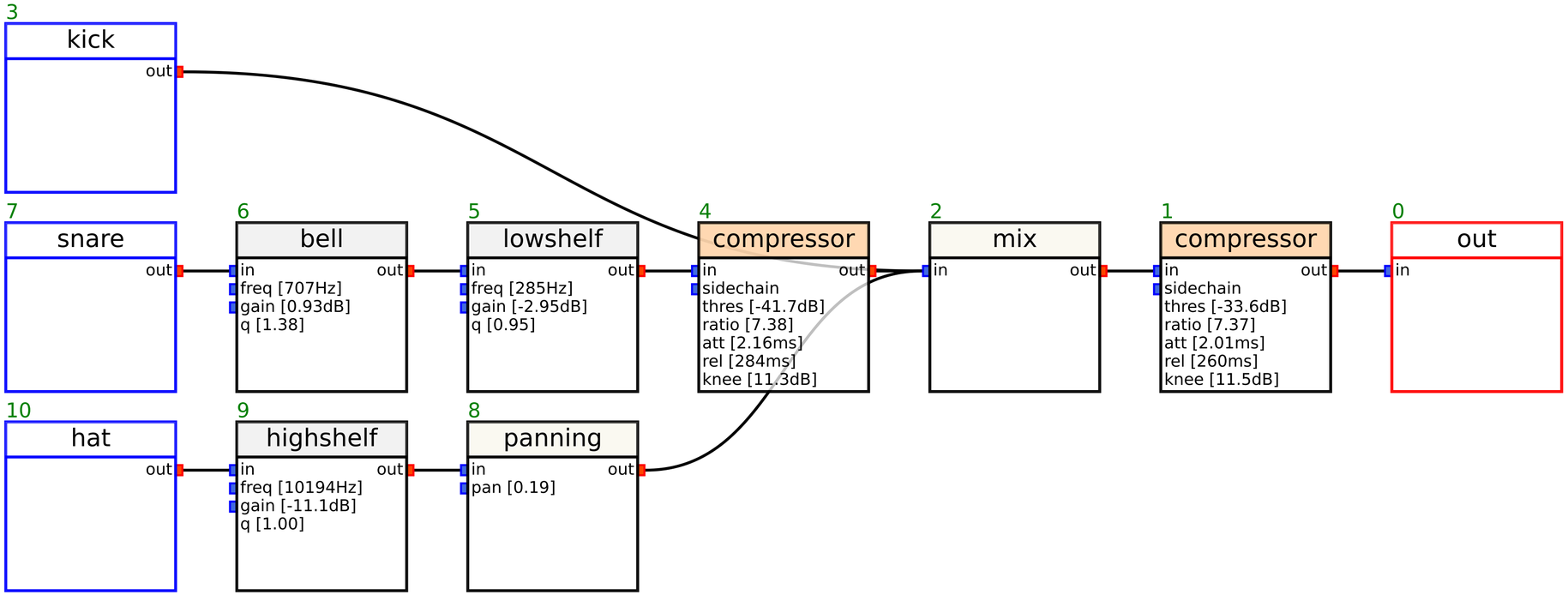
3
kick
out
7
snare
out
6
bell
in
out
freq [707Hz]
gain [0.93dB]
q [1.38]
5
lowshelf
in
out
freq [285Hz]
gain [-2.95dB]
q [0.95]
4
compressor
in
out
sidechain
thres [-41.7dB]
ratio [7.38]
att [2.16ms]
rel [284ms]
knee [11.3dB]
2
mix
in
out
1
compressor
in
out
sidechain
thres [-33.6dB]
ratio [7.37]
att [2.01ms]
rel [260ms]
knee [11.5dB]
0
out
in
10
hat
out
9
highshelf
in
out
freq [10194Hz]
gain [-11.1dB]
q [1.00]
8
panning
in
out
pan [0.19]