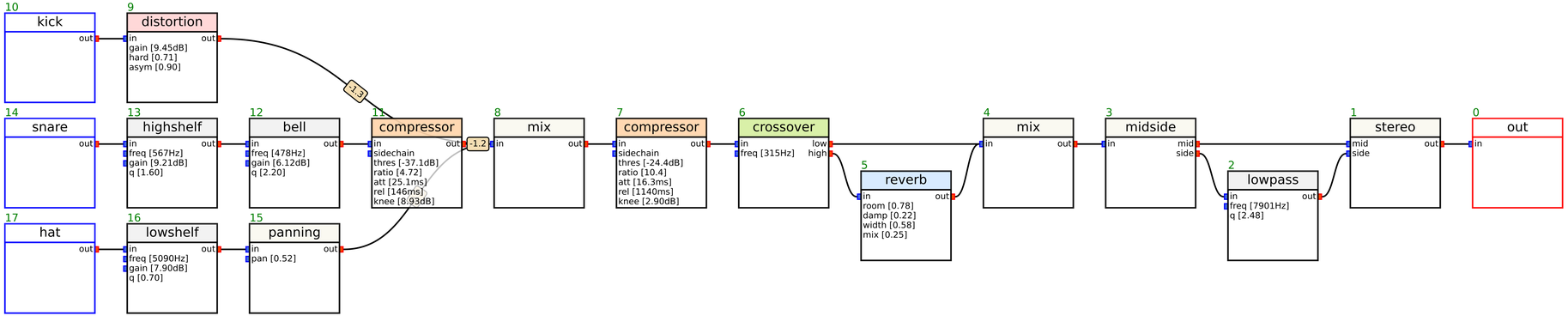
10
kick
out
9
distortion
in
out
gain [9.45dB]
hard [0.71]
asym [0.90]
-1.2
14
snare
out
13
highshelf
in
out
freq [567Hz]
gain [9.21dB]
q [1.60]
12
bell
in
out
freq [478Hz]
gain [6.12dB]
q [2.20]
11
compressor
in
out
sidechain
thres [-37.1dB]
ratio [4.72]
att [25.1ms]
rel [146ms]
knee [8.93dB]
-1.2
8
mix
in
out
7
compressor
in
out
sidechain
thres [-24.4dB]
ratio [10.4]
att [16.3ms]
rel [1140ms]
knee [2.90dB]
6
crossover
in
low
high
freq [315Hz]
5
reverb
in
out
room [0.78]
damp [0.22]
width [0.58]
mix [0.25]
4
mix
in
out
3
midside
in
mid
side
2
lowpass
in
out
freq [7901Hz]
q [2.48]
1
stereo
mid
side
out
0
out
in
17
hat
out
16
lowshelf
in
out
freq [5090Hz]
gain [7.90dB]
q [0.70]
15
panning
in
out
pan [0.52]