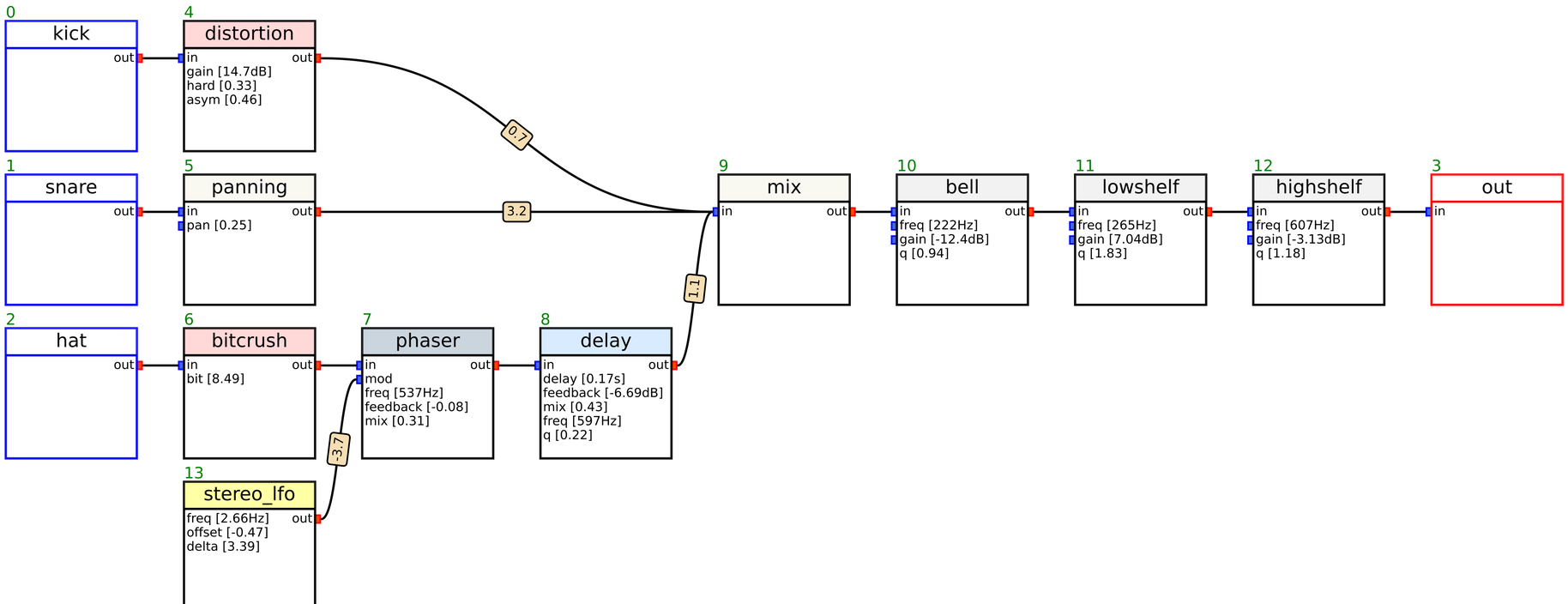
0
kick
out
1
snare
out
2
hat
out
4
distortion
in
out
gain [14.7dB]
hard [0.33]
asym [0.46]
5
panning
in
out
pan [0.25]
6
bitcrush
in
out
bit [8.49]
7
phaser
in
out
mod
freq [537Hz]
feedback [-0.08]
mix [0.31]
8
delay
in
out
delay [0.17s]
feedback [-6.69dB]
mix [0.43]
freq [597Hz]
q [0.22]
13
stereo_lfo
out
freq [2.66Hz]
offset [-0.47]
delta [3.39]
0.7
3.2
-3.7
1.1
9
mix
in
out
10
bell
in
out
freq [222Hz]
gain [-12.4dB]
q [0.94]
11
lowshelf
in
out
freq [265Hz]
gain [7.04dB]
q [1.83]
12
highshelf
in
out
freq [607Hz]
gain [-3.13dB]
q [1.18]
3
out
in