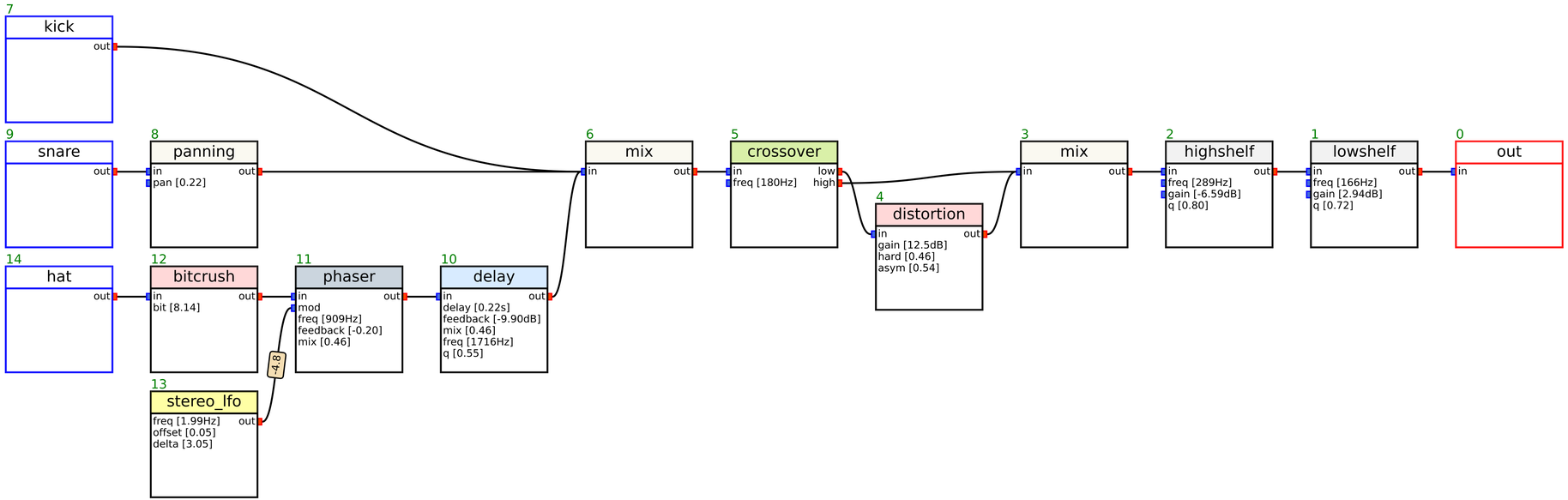
7
kick
out
9
snare
out
14
hat
out
8
panning
in
out
pan [0.22]
12
bitcrush
in
out
bit [8.14]
13
stereo_lfo
freq [1.99Hz]
offset [0.05]
delta [3.05]
out
11
phaser
in
out
mod
freq [909Hz]
feedback [-0.20]
mix [0.46]
10
delay
in
out
delay [0.22s]
feedback [-9.90dB]
mix [0.46]
freq [1716Hz]
q [0.55]
6
mix
in
out
5
crossover
in
low
freq [180Hz]
high
4
distortion
in
out
gain [12.5dB]
hard [0.46]
asym [0.54]
3
mix
in
out
2
highshelf
in
out
freq [289Hz]
gain [-6.59dB]
q [0.80]
1
lowshelf
in
out
freq [166Hz]
gain [2.94dB]
q [0.72]
0
out
in