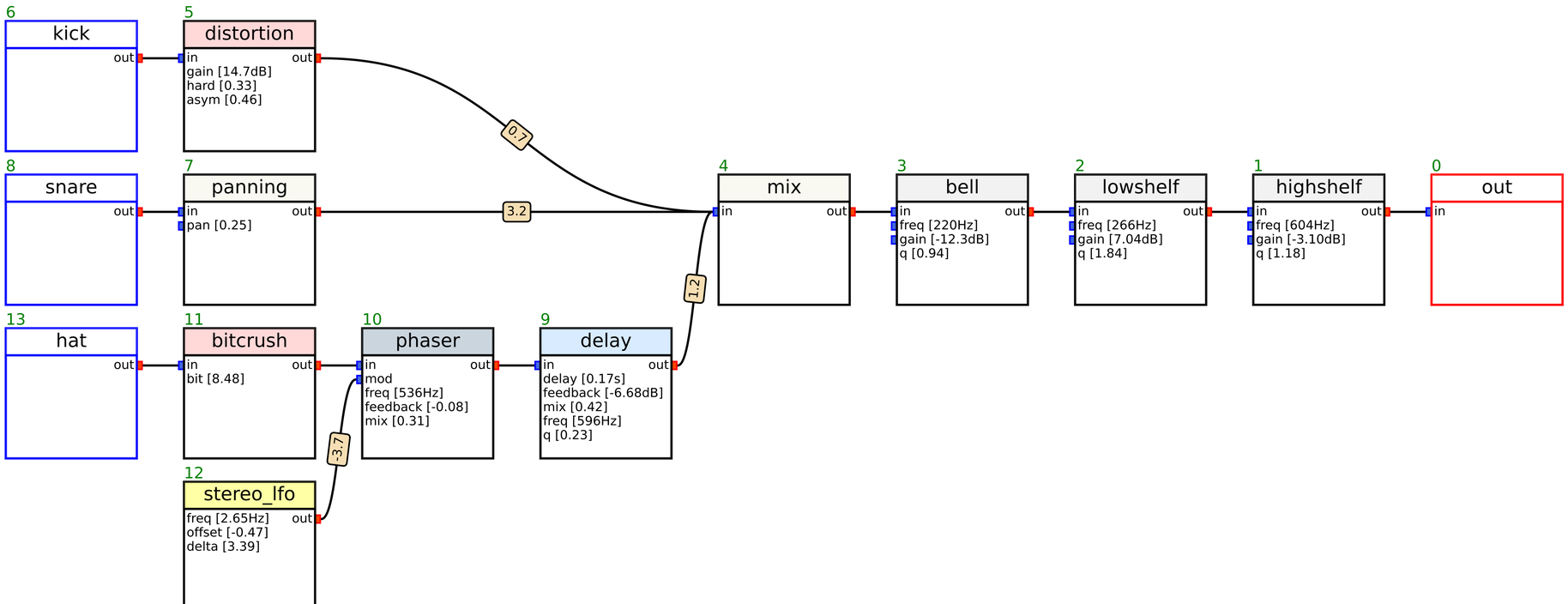
6
kick
out
5
distortion
in
out
gain [14.7dB]
hard [0.33]
asym [0.46]
8
snare
out
7
panning
in
out
pan [0.25]
13
hat
out
11
bitcrush
in
out
bit [8.48]
10
phaser
in
out
mod
freq [536Hz]
feedback [-0.08]
mix [0.31]
9
delay
in
out
delay [0.17s]
feedback [-6.68dB]
mix [0.42]
freq [596Hz]
q [0.23]
12
stereo_lfo
freq [2.65Hz]
out
offset [-0.47]
delta [3.39]
0.7
3.2
-3.7
1.2
4
mix
in
out
3
bell
in
out
freq [220Hz]
gain [-12.3dB]
q [0.94]
2
lowshelf
in
out
freq [266Hz]
gain [7.04dB]
q [1.84]
1
highshelf
in
out
freq [604Hz]
gain [-3.10dB]
q [1.18]
0
out
in