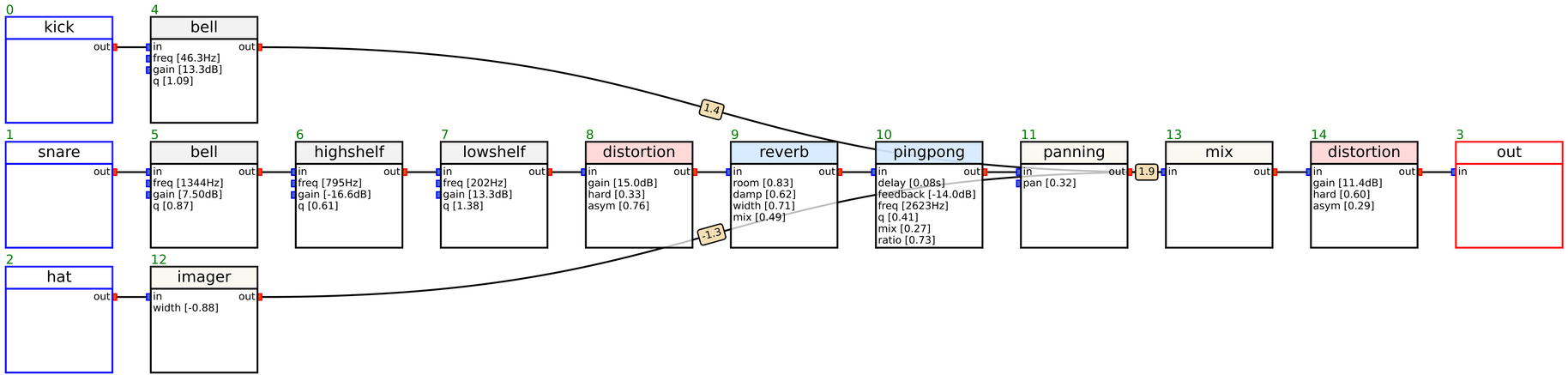
0
kick
out
4
bell
in
out
freq [46.3Hz]
gain [13.3dB]
q [1.09]
1
snare
out
5
bell
in
out
freq [1344Hz]
gain [7.50dB]
q [0.87]
6
highshelf
in
out
freq [795Hz]
gain [-16.6dB]
q [0.61]
7
lowshelf
in
out
freq [202Hz]
gain [13.3dB]
q [1.38]
8
distortion
in
out
gain [15.0dB]
hard [0.33]
asym [0.76]
9
reverb
in
out
room [0.83]
damp [0.62]
width [0.71]
mix [0.49]
10
pingpong
in
out
delay [0.08s]
feedback [-14.0dB]
freq [2623Hz]
q [0.41]
mix [0.27]
ratio [0.73]
11
panning
in
out
pan [0.32]
13
mix
in
out
14
distortion
in
out
gain [11.4dB]
hard [0.60]
asym [0.29]
3
out
in
2
hat
out
12
imager
in
out
width [-0.88]
1.4
-1.3
1.9