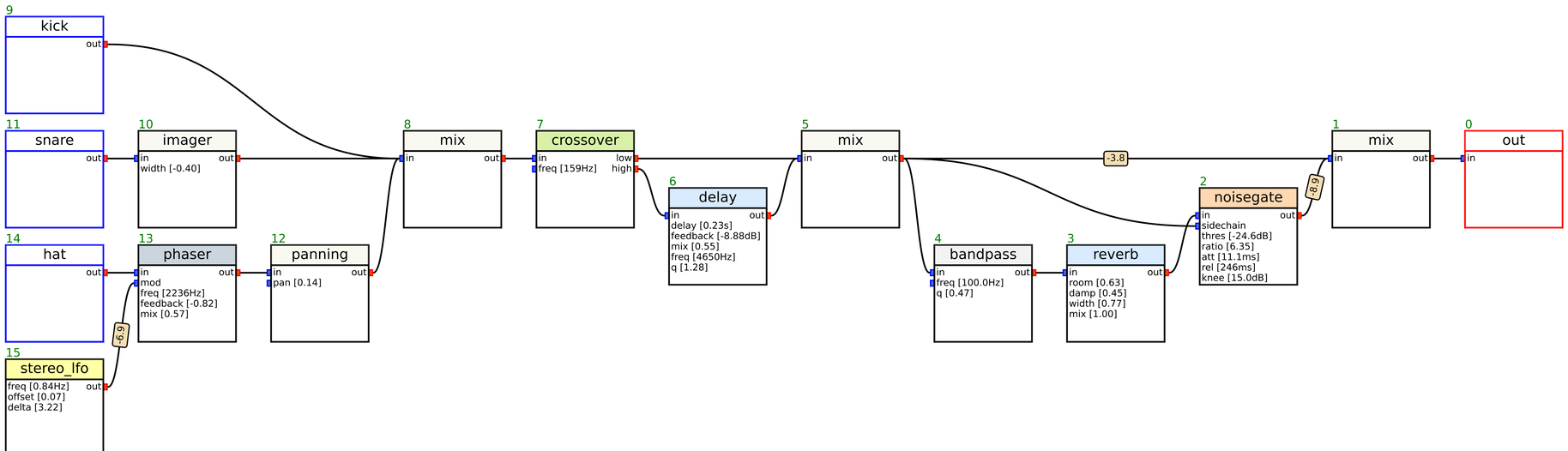
9
kick
out
11
snare
out
14
hat
out
15
stereo_lfo
freq [0.84Hz]
offset [0.07]
delta [3.22]
out
10
imager
in
out
width [-0.40]
13
phaser
in
out
mod
freq [2236Hz]
feedback [-0.82]
mix [0.57]
6.9
12
panning
in
out
pan [0.14]
8
mix
in
out
7
crossover
in
low
freq [159Hz]
high
6
delay
in
out
delay [0.23s]
feedback [-8.88dB]
mix [0.55]
freq [4650Hz]
q [1.28]
5
mix
in
out
-3.8
4
bandpass
in
out
freq [100.0Hz]
q [0.47]
3
reverb
in
out
room [0.63]
damp [0.45]
width [0.77]
mix [1.00]
2
noisegate
in
out
sidechain
thres [-24.6dB]
ratio [6.35]
att [11.1ms]
rel [246ms]
knee [15.0dB]
-8.9
1
mix
in
out
0
out
in