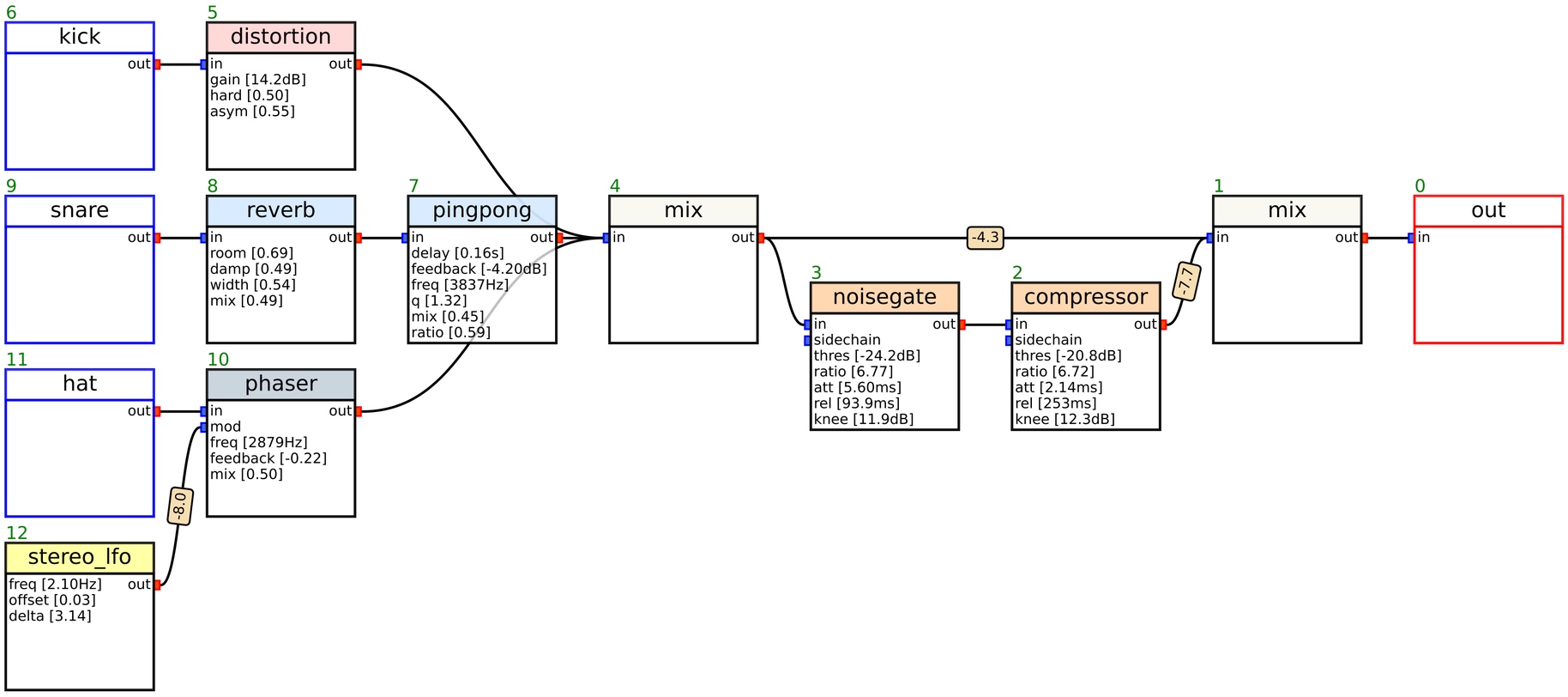
6
kick
out
5
distortion
in
out
gain [14.2dB]
hard [0.50]
asym [0.55]
9
snare
out
8
reverb
in
out
room [0.69]
damp [0.49]
width [0.54]
mix [0.49]
7
pingpong
in
out
delay [0.16s]
feedback [-4.20dB]
freq [3837Hz]
q [1.32]
mix [0.45]
ratio [0.59]
4
mix
in
out
-4.3
3
noisegate
in
out
sidechain
thres [-24.2dB]
ratio [6.77]
att [5.60ms]
rel [93.9ms]
knee [11.9dB]
2
compressor
in
out
sidechain
thres [-20.8dB]
ratio [6.72]
att [2.14ms]
rel [253ms]
knee [12.3dB]
-7.7
1
mix
in
out
0
out
in
11
hat
out
10
phaser
in
out
mod
freq [2879Hz]
feedback [-0.22]
mix [0.50]
-8.0
12
stereo_lfo
freq [2.10Hz]
out
offset [0.03]
delta [3.14]